Workshop Manual

Ameo 2017 ➤ , Arteon 2018 ➤ ,
Atlas 2017 ➤ , Bora 1999 ➤ ,
Bora Variant 1999 ➤ , CC 2010 ➤ ,
CC 2012 ➤ , Eos 2006 ➤ , Golf 1998 ➤ ,
Golf 2004 ➤ , Golf 2009 ➤ ,
Golf 2013 ➤ , Golf 2017 ➤ ,
Golf Cabriolet 2012 ➤ ,
Golf Plus 2005 ➤ , Golf Plus 2009 ➤ ,
Golf Sportsvan 2015 ➤ ,
Golf Sportsvan 2018 ➤ ,
Golf Variant 1998 ➤ ,
Golf Variant 2014 ➤ ,
Golf Variant 2017 ➤ , Lupo 1999 ➤ ,
Lupo 3L 1999 ➤ , Passat 1997 ➤ ,
Passat 2006 ➤ , Passat 2011 ➤ ,
Passat 2015 ➤ , Passat 2019 ➤ ,
Passat (NMS - US) 2012 ➤ ,
Passat (NMS - US) 2016 ➤ ,
Passat (NMS - US) 2019 ➤ ,
Passat CC 2009 ➤ ,
Passat Variant 1997 ➤ ,
Passat Variant 2011 ➤ ,
Passat Variant 2015 ➤ ,
Passat Variant 2019 ➤ , Phaeton 2003 ➤ ,
Polo 1995 ➤ , Polo 2002 ➤ ,
Polo 2010 ➤ , Polo 2014 ➤ ,
Polo 2018 ➤ , Polo KH IN 2010 ➤ ,
Polo KH IN 2015 ➤ ,
Polo KH MY 2014 ➤ ,
Polo KH MY 2015 ➤ ,

satelettronica
Copyright by Volkswagen AG. Volkswagen AG does not guarantee or accept any liability with respect to the correctness of information in this document.

Polo Lim IN 2011 ➤ ,
Polo Lim IN 2016 ➤ ,
Polo Lim MY 2014 ➤ ,
Polo Lim MY 2016 ➤ ,
Polo Lim RUS 2011 ➤ ,
Polo Lim RUS 2016 ➤ , Scirocco 2009 ➤ ,
Scirocco 2015 ➤ , Sharan 1996 ➤ ,
Sharan 2011 ➤ , Sharan 2016 ➤ ,
T-Cross 2019 ➤ , T-Roc 2018 ➤ ,
Tiguan 2008 ➤ , Tiguan 2016 ➤ ,
Tiguan MEX 2017 ➤ ,
Tiguan RUS 2017 ➤ , Touareg 2003 ➤ ,
Touareg 2010 ➤ , Touareg 2015 ➤ ,
Touareg 2018 ➤ , Touran 2003 ➤ ,
Touran 2016 ➤ , XL1 2015 ➤ ,
e-Golf 2014 ➤ , e-Golf 2017 ➤ ,
e-up! 2014 ➤ , e-up! 2017 ➤ ,
up! 2012 ➤ , up! 2017 ➤

Electrical system - general information

Edition 08.2019

Protected by copyright. Copyright by Volkswagen AG.
Volkswagen AG does not guarantee or accept any liability with respect to the correctness of information in this document. Copyright by Volkswagen AG.
satelettronica

List of Workshop Manual Repair Groups

Repair Group

27 - Starter, current supply, CCS

90 - Gauges, instruments

92 - Windscreen wash/wipe system

94 - Lights, bulbs, switches - exterior

96 - Lights, bulbs, switches - interior

97 - Wiring

satelettronica

Reproduction for commercial purposes, in part or in whole, is not permitted unless authorised by Volkswagen AG. Volkswagen AG does not guarantee or accept any liability with respect to the correctness of information in this document. Copyright by Volkswagen AG.

Technical information should always be available to the foremen and mechanics, because their careful and constant adherence to the instructions is essential to ensure vehicle road-worthiness and safety. In addition, the normal basic safety precautions for working on motor vehicles must, as a matter of course, be observed.

All rights reserved.
No reproduction without prior agreement from publisher.

Copyright © 2019 Volkswagen AG, Wolfsburg

Protected by copyright. Copying for private or commercial purposes, in part or in whole, is not permitted unless authorised by Volkswagen AG. Volkswagen AG does not guarantee or accept any liability with respect to the correctness of information in this document. Copyright by Volkswagen AG.

satelettronica

All rights reserved.
No reproduction without prior agreement from publisher.

Copyright © 2019 Volkswagen AG, Wolfsburg

Contents

27 - Starter, current supply, CCS 1
1 **Battery** 1
1.1 Fundamentals for batteries 1
1.2 Types of batteries 1
1.3 Warning notices and safety regulations 3
1.4 Battery terminal connection 5
2 **Checking battery** 6
2.1 Checking the various types of batteries 6
2.2 Visual check 7
2.3 Information about battery replacement and battery gas venting 8
2.4 Checking colour indicator in battery cover 9
2.5 Battery tester with printer VAS 6161 11
2.6 Midtronics MCR340V battery tester only for USA/Canada vehicles 16
2.7 Current draw test 20
3 **Charging the battery** 22
3.1 Battery charger VAS 5095 A 22
3.2 Battery charger VAS 5900 28
3.3 Battery charger VAS 5900 A 40
3.4 Battery charger VAS 5903 48
3.5 Battery charger VAS 5906 60
3.6 Battery charger VAS 5908 63
3.7 Midtronics INC 940 battery charger only for USA/Canada 72
3.8 Solar charger module VAS 6102B 76
3.9 Totally discharged batteries 77
4 **Cruise control system (CCS)** 79
4.1 Activating and deactivating cruise control system (CCS) 79

90 - Gauges, instruments 80

92 - Windscreen wash/wipe system 81
1 **Washer fluid line hose couplings** 81
1.1 Windscreen and rear window washer system 81
1.2 Headlight washer system 82
2 **Hose repair** 83
2.1 General description 83
2.2 Repairing smooth pipe 83
2.3 Repairing corrugated pipe 83
3 **Distinguishing features of jointless wiper blades** 85

94 - Lights, bulbs, switches - exterior 86
1 **Operation and safety notes for gas discharge lamps** 86

96 - Lights, bulbs, switches - interior 89
1 **12 V socket** 89
1.1 Removing and installing 12 V socket 89
1.2 Removing and installing socket illumination bulb L42 89
2 **Cigarette lighter U1** 90
2.1 General description 90
2.2 Assembly overview 91
2.3 Removing and installing cigarette lighter socket 92
2.4 Removing and installing cigarette lighter illumination bulb L28 94

Protected by copyright. Copying for private or commercial purposes, in part or in whole, is not permitted unless authorised by Volkswagen AG. Volkswagen AG does not guarantee or accept any liability with respect to the correctness of information in this document. Copyright by Volkswagen AG.
satelettronica

97 - Wiring 96
1 Vehicle diagnosis, testing and information systems 96
1.1 Connecting vehicle diagnostic tester 96
1.2 Connecting vehicle diagnostic tester Golf Model Year 1998 - 2003 98
2 Repairs to wiring harnesses and connectors 99
2.1 General notes concerning repairs to vehicle electrical system 99
2.2 Wiring harness repair set 102
2.3 Tool descriptions 103
2.4 Repairs to wiring harnesses 106
2.5 Repairs to fibre optic cables 126
2.6 Repair of aerial wires 132
2.7 Repairs to contact housings and connectors 143
2.8 Releasing and dismantling contact housings 147
3 Contact surface cleaning set VAS 6410 153
3.1 Using contact surface cleaning set VAS 6410 153
4 Renewing Lambda probe 160
4.1 Renewing LSF Lambda probe (4-pin) 160
4.2 Renewing LSU Lambda probe (6-pin) 161
4.3 Types of protective tube on uniform Lambda probes 162

Protected by copyright. Copying for private or commercial purposes, in part or in whole, is not permitted unless authorised by Volkswagen AG. Volkswagen AG does not guarantee or accept any liability with respect to the correctness of information in this document. Copyright by Volkswagen AG.

satelettronica

27 – Starter, current supply, CCS

1 Battery

(VRL013292; Edition 08.2019)

WARNING

Danger of injury! Observe warning notices and safety regulations ⇒ page 3 !

Caution

To prevent damage to the battery or vehicle, read the information about the types of battery ⇒ page 1 .

Note

On vehicles with high-voltage battery, a voltage test of the 12 V electrical system must be performed after the 12 V battery is disconnected. If voltage is detected, the high-voltage system must be de-energised.

1.1 Fundamentals for batteries

To ensure long use of the battery, the battery must be checked, serviced and maintained according to the specifications in this manual.

Apart from supplying energy for starting the engine, the battery has other tasks: it acts as a buffer and supplies electrical energy to the complete electrical on-board supply of the vehicle.

1.2 Types of batteries

General information

Caution

The description for the following batteries is for maintenance-free batteries. No stickers may be removed and do not replenish with distilled water. Only perform a visual check. Refer to chapter, Checking battery ⇒ page 6 .

Protected by copyright. Copyright. Copying for private or commercial purposes, in part or in whole, is not permitted unless authorised by Volkswagen AG. Volkswagen AG does not guarantee or accept any liability with respect to the correctness of information in this document. Copyright by Volkswagen AG.
satelettronica

1.2.1 Battery with »standard« colour indicator

This is a maintenance-free battery with liquid electrolyte (wet battery).

> **WARNING**
>
> *It is not permissible to test or charge batteries whose colour indicator is light yellow. Do not slave/jump start the vehicle!*
>
> *Danger of explosion when checking and charging or slave/jump starting.*
>
> *These batteries must be renewed.*

This battery is equipped with a colour indicator. The colour indicator provides information about the electrolyte level and the charge state of the battery. Checking the colour indicator ⇒ page 9

1.2.2 Battery with »enhanced« colour indicator

This is a maintenance-free battery with liquid electrolyte (wet battery).

> **Caution**
>
> *No stickers may be removed and do not replenish with distilled water. Only perform a visual check. Refer to chapter, Checking battery* ⇒ page 6 .

> **WARNING**
>
> *It is not permissible to test or charge batteries whose colour indicator is light yellow. Do not slave/jump start the vehicle!*
>
> *Danger of explosion when checking and charging or slave/jump starting.*
>
> *These batteries must be renewed.*

The battery is used for particular requirements in certain vehicles equipped with a start/stop system. The battery can be identified by the lettering “EFB” on the battery cover. “EFB” stands for »enhanced flooded battery«.

An “EFB” battery may only be replaced with another “EFB” battery.

The “EFB” battery has a colour indicator to enable the electrolyte level to be checked.

Checking the colour indicator ⇒ page 9

> **Note**
>
> *“EFB” batteries are used in the smaller petrol engines with start/stop system and manual gearbox as of 05.2011.*

Protected by copyright. Copying for private or commercial purposes, in part or in whole, is not permitted unless authorised by Volkswagen AG. Volkswagen AG does not guarantee or accept any liability with respect to the correctness of information in this document. Copyright by Volkswagen AG.

sateletronica

1.2.3 Absorbent glass mat battery

Maintenance-free battery with a contained electrolyte and no colour indicator

Lead-acid battery where the electrolyte is contained within a microscopic glass mat (AGM). The battery is sealed and fitted with valves.

AGM is the abbreviation for Absorbent Glass Mat.

Due to containment of the electrolyte, this type of battery cannot have a colour indicator. Absorbent glass mat batteries are identified by the abbreviation AGM on the battery.

Note

- *Always replace an absorbent glass mat battery with another absorbent glass mat battery.*
- *If the battery is renewed, the battery monitor control unit - J367- must be adapted.*

– Connect vehicle diagnostic tester .

– Adapt battery monitor control unit - J367- ⇒ Vehicle diagnostic tester.

1.3 Warning notices and safety regulations

⇒ “1.3.1 Dangers when handling vehicle batteries”, page 3

⇒ “1.3.2 Safety markings on battery”, page 4

⇒ “1.3.3 Working on airbag system”, page 5

1.3.1 Dangers when handling vehicle batteries

Recognition and avoidance of dangers

Batteries can be dangerous. These dangers can be avoided when the warnings on the battery, in the operating manual and in ELSA are observed.

Protected by copyright. Copyright for private or commercial purposes, in part or in whole, is not permitted unless authorised by Volkswagen AG. Volkswagen AG does not guarantee or accept any liability with respect to the correctness of information in this document. Copyright by Volkswagen AG.
satelettronica

Authorised by Volkswagen AG. Volkswagen AG does not guarantee or accept any liability with respect to the correctness of information in this document. Copyright by Volkswagen AG.

WARNING

- *Untrained personnel e.g. apprentices and trainees, may only work on batteries when supervised by a trained specialist such as a vehicle mechanic/foreman or vehicle electrician/foreman.*
- *Acid is highly corrosive. There is a considerable danger of acid burns if personnel do not handle batteries correctly. Therefore suitable measures must be taken to ensure that equipment/solutions etc. are available to neutralize acid burns. A suitable solution is: e.g. a soap solution.*
- *If electrolyte leaks from a battery it may cause skin burns or acid corrosion and rusting on the vehicle. This may damage safety relevant components on the vehicle.*
- *The gas which forms when charging and the gas which may escape through vent valves is explosive. In extreme cases a battery may explode if the battery is not handled correctly.*
- *Batteries whose magic eye shows light yellow must be replaced. They must not be checked or charged and do not slave/jump start. Danger of explosion when checking and charging or slave/jump starting.*
- *It is prohibited to cause sparks through grinding, welding, cutting operations and use naked lights in the vicinity of batteries. Smoking is also prohibited. Sparks generated by electrostatic charging must also be avoided. Always touch the vehicle body before touching the battery.*
- *Only work on batteries in well ventilated and suitable rooms.*

1.3.2 Safety markings on battery

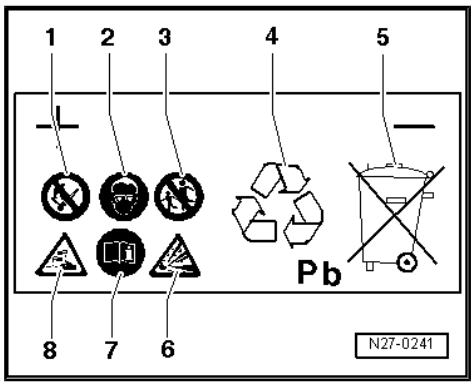

Safety markings on battery

1. - Fires, sparks, naked flames and smoking are prohibited when handling batteries. Avoid sparks as well as electrostatic discharge when working with cables and electrical units. Avoid short circuits. Therefore never lay a tool on a battery.

2. - Wear eye protection before commencing work on battery.

3. - Keep children away from acid and batteries.

4. - Disposal: old batteries are classed as hazardous waste. They may only be disposed of through a suitable collection centre and only in accordance with respective legislation.

5. - Never dispose of old batteries in household waste system!

6. - There is a danger of an explosion when working with batteries. A highly explosive gas is produced when batteries are charged.

7. - Always follow instructions on battery, in ELSA "Electrical System, General Information" and in owner's manual.

8. - Battery acid is very caustic; therefore wear eye protection and gloves when working with batteries. Do not tilt battery. Acid can leak out of the gas vents of some batteries.

satelettronica

1.3.3 Working on airbag system

WARNING

When work is performed on the airbag system (pyrotechnical components, airbag control unit - J234- , wiring) the battery earth strap must be disconnected with the ignition switched on.

Exception: in vehicles with a battery in the vehicle interior, the ignition must be switched off.

- *Then, cover the negative terminal.*
- *A waiting time of 10 seconds is necessary after disconnecting the battery.*
- *Battery must be connected with ignition switched on.*
- *No persons may be in the interior when the battery is reconnected.*

Ensure, in this case, that you are not within the effective range of the airbag and the belt tensioner.

If when reconnecting the battery and the ignition was not in the on position - warning lights in dash panel will not light up - the ignition may only be switched on (key/button) from the driver's seat with the seat set in the rearmost position.

Note

On vehicles with high-voltage battery, a voltage test of the 12 V electrical system must be performed after the 12 V battery is disconnected. If voltage is detected, the high-voltage system must be de-energised.

1.4 Battery terminal connection

WARNING

Danger of injury! Observe warning notices and safety regulations *⇒ page 3* *!*

Caution

To prevent damage to the battery terminal clamps and battery terminals, the following should be observed:

- *The battery terminal clamps should only be fitted by hand and without using force.*
- *Battery terminals should not be coated with grease.*
- *The battery clamps should be fitted so that the battery terminal is either flush with the clamp or protruding from it.*
- *Once the battery terminal clamps have been tightened to the specified torque, the threaded connections should not be tightened any further.*

Protected by copyright. Copying for private or commercial purposes, in part or in whole, is not permitted unless authorised by Volkswagen AG. Volkswagen AG does not guarantee or accept any liability with respect to the correctness of information in this document. Copyright by Volkswagen AG.
satelettronica

2 Checking battery

WARNING

Danger of injury! Observe warning notices and safety regulations ⇒ page 3 !

Caution

To prevent damage to the battery or vehicle, read the information about the types of battery ⇒ page 1 .

Note

Observe the chapter "Battery" for the respective vehicle ⇒ Maintenance ; Booklet .

2.1 Checking the various types of batteries

2.1.1 Checking a battery with colour indicator

WARNING

Danger of injury! Observe warning notices and safety regulations ⇒ page 3 !

Carry out procedure in sequence as follows:

1. Visual check ⇒ page 7
2. Check the colour indicator, “3-colour”, ⇒ page 9 or “2-colour”, ⇒ page 10

WARNING

It is not permissible to test or charge batteries whose colour indicator is light yellow. Do not slave/jump start the vehicle!

Danger of explosion when checking and charging or slave/jump starting.

These batteries must be renewed.

3. Battery test with battery tester with printer - VAS 6161- ⇒ page 11 .
4. Depending on the result of the battery test, “perform current draw test” ⇒ page 20 .

2.1.2 Absorbent glass mat battery

Carry out procedure in sequence as follows:

1. Visual check ⇒ page 7
2. Battery check using battery tester with printer - VAS 6161- ⇒ page 11

Protected by copyright. Copying for private or commercial purposes, in part or in whole, is not permitted unless authorised by Volkswagen AG. Volkswagen AG does not guarantee or accept any liability with respect to the correctness of information in this document. Copyright by Volkswagen AG.
satelettronica

3. Depending on the result of the battery test, “perform current draw test” ⇒ page 20 .

2.2 Visual check

WARNING

Danger of injury! Observe warning notices and safety regulations ⇒ page 3 !

It is essential first to visually check the external condition, the terminals of the battery, the plugs of the gas vent openings and that the battery is seated securely before performing more extensive tests.

Note

Observe the chapter "Battery" for the respective vehicle ⇒ Maintenance ; Booklet .

Caution

- *The battery will be damaged if the battery is not secured correctly.*
- *Vibrations shorten the life of the battery, there is a danger of an explosion, the cell plates may be damaged and the clamping bracket may damage the battery housing.*
- *Check battery is securely seated, if necessary tighten securing bolt to specified torque.*

Performing this test establishes:

- If battery housing is damaged Electrolyte can leak out if the housing is damaged. If battery acid leaks out, serious damage to the vehicle could be caused. Treat components affected by leaked battery acid immediately with acid neutraliser or a soap solution.
- Check whether the battery terminals (battery wire connections) are damaged. The necessary contact on the battery terminal clamps cannot be guaranteed if the battery terminals are damaged. When connecting the battery clamps, tighten the battery clamps to torque specified in this workshop manual “Electrical system” for the respective vehicle. If the battery terminal clamps are not correctly seated and tightened, the wiring may burn. Which will cause malfunctions in the electrical system. Therefore it can no longer be guaranteed that the vehicle will function correctly.
- Whether the gas vent hose and the plug are fitted correctly. On vehicles with batteries in the passenger compartment or luggage compartment, it is essential to ensure that the gas vent hose is fitted correctly. Make sure that there are no exposed gas vent openings in the area of the positive battery terminal. If a gas vent opening is exposed in this area, it must be sealed with a plug. The gas vent hose must be connected in the area of the negative battery terminal to the exposed gas vent opening. Observe chapter
  ⇒ “2.3 Information about battery replacement and battery gas venting”, page 8

Protected by copyright. Copying for private or commercial purposes, in part or in whole, is not permitted unless authorised by Volkswagen AG. Volkswagen AG does not guarantee or accept any liability with respect to the correctness of information in this document. Copyright by Volkswagen AG.
satelettronica

2.3 Information about battery replacement and battery gas venting

- For safety reasons, it is important to determine which side of the battery gas is vented from.
- For areas of application in which a gas vent hose is used, ensure that the gas vent hose is seated securely and that the gas vent opening on the opposite side is sealed.
- When renewing the vehicle battery, make absolutely sure that the gas vent opening in the area of the positive battery terminal is not exposed. Should a vent opening be exposed in this area, it must be sealed with a plug and the vent in the area of the negative battery terminal must be opened.
- If the vehicle is installed with an AGM battery outside the engine compartment, ensure that the battery is replaced with a different AGM battery.
- If the AGM battery is renewed, the battery monitor control unit - J367- must be adapted.
- Connect vehicle diagnostic tester .
- Adapt battery monitor control unit - J367- ⇒ Vehicle diagnostic tester.
- For launch of the Passat 3C (2006), the gas vent opening is always on the negative battery terminal side.
- If there is a protective cap with sprayed on plug on the battery positive terminal of the replacement part battery 000.915.105.DX, with the exception of 000.915.105.DN and all Economy batteries with single index, this must also be changed on the negative battery terminal or positive battery terminal side according to the situation. A list of batteries can be found here ⇒ page 8 .
- All AGM, EFB+, EFB batteries and the 36AH battery with original part no.: 000.915.105.DN, installed e.g. in the up! and Polo, have a protective cap without sprayed on plug on the positive battery terminal. The gas vent on the positive battery terminal side is already sealed here.

If a genuine replacement part battery is discovered with the following part numbers, a red sealing plug must be fitted either on the positive or negative battery terminal side. If this is not installed, it must be retrofitted - genuine part no.: 000.915.506

List of batteries with protective cap and sprayed on plug

OES wet:

- “36 Ah” 000.915.105.DA
- “44 Ah” 000.915.105.DB
- “51 Ah” 000.915.105.DC
- “60 Ah” 000.915.105.DD
- “61 Ah” 000.915.105.DE
- “72 Ah” 000.915.105.DG
- “80 Ah” 000.915.105.DH
- “85 Ah” 000.915.105.DJ
- “95 Ah” 000.915.105.DK
- “110 Ah” 000.915.105.DL
- “36 Ah” 000.915.105.DN

Protected by copyright. Copying for private or commercial purposes, in part or in whole, is not permitted unless authorised by Volkswagen AG. Volkswagen AG does not guarantee or accept any liability with respect to the correctness of information in this document. Copyright by Volkswagen AG.

satelettronica

Economy batteries:

- “61 Ah” JZW.915.105.
- “72 Ah” JZW.915.105.A
- “85 Ah” JZW.915.105.B
- “44 Ah” JZW.915.105.C
- “36 Ah” JZW.915.105.D
- “95 Ah” JZW.915.105.E
- “80 Ah” JZW.915.105.F

2.4 Checking colour indicator in battery cover

2.4.1 Checking colour indicator, “3-colour”

WARNING

Danger of injury! Observe warning notices and safety regulations ⇒ page 3 !

General information about colour indicator:

Applies for all batteries with “1J0”, “7N0” and “3B0” indexes in original equipment and for all replacement batteries 191 915 105 AB and from “000 915 105 AX” index.

The colour indicator provides you with information about the electrolyte level and charge state of the battery.

Before carrying out a visual check, tap the inspection window lightly and carefully using the handle of a screwdriver. The air bubbles, which can influence the display, will dissipate when doing this. This will make the colour indicator reading more accurate.

Note

- *Air bubbles can form under the sight glass, particularly when a battery has been recharged, i.e. also when the battery has been charged during normal vehicle operation. These falsify the reading of the colour indicator.*
- *Since the colour indicator is only located in one battery cell, the indicator also only applies to this battery cell. Determining the exact condition of the battery is possible only by means of a battery test ⇒ page 11 .*
- *The colour indicator can be located at various positions on the battery.*

Three different colour displays are possible:

- »Green«, battery is charged sufficiently.
- »Black«, battery partly discharged, charge state < 65 % or completely discharged
- »Colourless or light yellow«, battery must be renewed.

satelettronica

WARNING

It is not permissible to test or charge batteries whose colour indicator is light yellow. Do not slave/jump start the vehicle!

Danger of explosion when checking and charging or slave/jump starting.

These batteries must be renewed.

2.4.2 Checking colour indicator, “2-colour”

WARNING

Danger of injury! Observe warning notices and safety regulations ⇒ page 3 !

General information about colour indicator:

The general introduction of the “2-colour” display took place gradually in 2009. The “2-colour” indicator does not include the colour »green« for indicating the charge level.

The colour indicator provides you with information on the electrolyte level of the battery.

The battery's charge state can no longer be read off via the colour indicator. The battery test has to be used for this purpose, ⇒ page 11

Before carrying out a visual check, tap the magic eye lightly and carefully using the handle of a screwdriver. The air bubbles, which can influence the display, will dissipate when doing this. The colour display of the magic eye will therefore be more accurate.

Note

- *Air bubbles can form under the sight glass, particularly when a battery has been recharged, i.e. also when the battery has been charged during normal vehicle operation. These falsify the reading of the colour indicator.*
- *Since the colour indicator is only located in one battery cell, the indicator also only applies to this battery cell. Determining the exact condition of the battery is only possible by means of a battery test ⇒ page 11 .*
- *The colour indicator can be located at various positions on the battery.*

Three different colour displays are possible:

- »Black«, electrolyte level is OK.
- »Light yellow«, electrolyte level too low The battery must be renewed.

Copyright by Volkswagen AG. Volkswagen AG does not guarantee or accept any liability with respect to the correctness of information in this document. Copyright by Volkswagen AG. Reproduced by permission only. Not to be reproduced or copied, in whole or in part, for commercial purposes, in part or in whole, without the express permission of Volkswagen AG.

satelettronica

WARNING

It is not permissible to test or charge batteries whose colour indicator is light yellow. Do not slave/jump start the vehicle!

Danger of explosion when checking and charging or slave/jump starting.

These batteries must be renewed.

2.5 Battery tester with printer - VAS 6161-

General description:

WARNING

Danger of injury! Observe warning notices and safety regulations ⇒ page 3 !

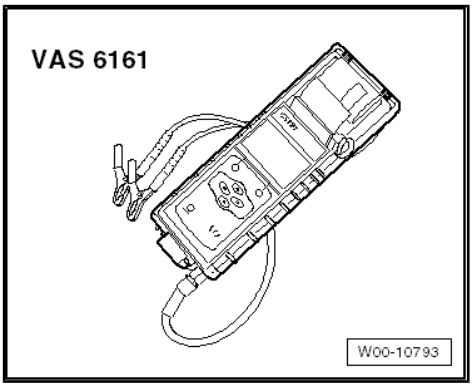

It is not necessary to remove or disconnect battery when using battery tester with printer - VAS 6161- .

The battery tester with printer - VAS 6161- does not load the battery any more. It works on the principle of dynamic conductance acquisition.

Every battery type is stored in the tester.

Data can be stored on an SD card.

The battery tester with printer - VAS 6161- can be updated via an interface or an SD card, so that battery data from Volkswagen are always up to date.

The integrated temperature sensor improves measurement quality.

A 2D scanner is available as an option to read data directly from the battery's 2D code.

Note

Observe the ⇒ operating manual of the battery tester with printer - VAS 6161- .

Protected by copyright. Copying for private or commercial purposes, in part or in whole, is not permitted unless authorised by Volkswagen AG. Volkswagen AG does not guarantee or accept any liability with respect to the correctness of information in this document. Copyright by Volkswagen AG.

satelettronica

2.5.1 Description of battery tester with printer - VAS 6161-

1 - Integrated printer

2 - Operating lever for paper compartment

3 - Paper slot

4 - LCD screen with main menu

5 - Control panel with ON/OFF button

6 - Connection for battery test cable

7 - Memory card slot

8 - Infrared temperature sensor

9 - Data transmitter for PC

2.5.2 Perform battery test with battery tester with printer - VAS 6161- .

WARNING

Danger of injury! Observe warning notices and safety regulations ⇒ page 3 !

Special tools and workshop equipment required

- Battery tester with printer -VAS 6161-

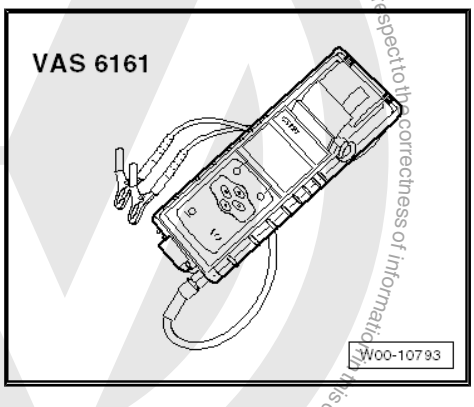

Performing battery test:

WARNING

It is not permissible to test or charge batteries whose colour indicator is light yellow. Do not slave/jump start the vehicle!

Danger of explosion when checking and charging or slave/jump starting.

These batteries must be renewed.

– Switch off ignition and all electrical consumers.

– Check the colour indicator in batteries with an inspection window ⇒ page 6 .

– Switch tester on.

Volkswagen AG. Volkswagen AG does not guarantee or accept any liability with respect to the correctness of information in this document. Copyright by Volkswagen AG. Copyright. Copying for private or commercial purposes, in part or in whole, is not permitted unless authorised by Volkswagen AG.
satelettronica

– Connect red terminal “+” of tester to positive terminal.
– Connect black terminal “-” of tester to negative terminal.

Note

Ensure test clamps have a good contact!

– Select one of the following tests:

Note

- *Genuine VW battery test: all Genuine VW batteries are to be tested with this, both during and after warranty.*
- *“Non”-VW battery test: batteries from all other manufacturers are to be tested with this.*
- *Stock maintenance: for batteries in showroom and storage vehicles requiring maintenance.*

- Genuine Volkswagen battery
  ⇒ “2.5.3 Genuine Volkswagen battery test”, page 13 .
- “Non”-VW battery ⇒ “2.5.4 Non-VW battery test”, page 14 .
- Stock maintenance
  ⇒ “2.5.5 Carrying out stock maintenance”, page 14 .

Note

- *The test is completed after about 10 seconds.*
- *The result of the test is printed out by the printer.*
- *The tester requires no cooling phase before it is ready for the next measurement.*

2.5.3 Genuine Volkswagen battery test

WARNING

It is not permissible to test or charge batteries whose colour indicator is light yellow. Do not slave/jump start the vehicle!

Danger of explosion when checking and charging or slave/jump starting.

These batteries must be renewed.

– Select “Genuine Volkswagen battery test” in the menu.
– Select “In vehicle” or “Outside vehicle”.
– Select “On battery terminal” or “On jump-start point”.
– Scan in 2D code of battery or manually select battery type and amperage.
– Measure temperature. Hold temperature sensor about 5 cm above one battery terminal until temperature stabilises.
– Start test.
– Print out test log if necessary.

Protected by copyright. Copyright by Volkswagen AG. Volkswagen AG does not guarantee or accept any liability with respect to the correctness of information in this document. Copyright by Volkswagen AG. Reproduced by Volkswagen AG. Volkswagen AG does not guarantee or accept any liability with respect to the correctness of information in this document. Copyright by Volkswagen AG.
satelettronica

2.5.4 “Non”-VW battery test

Note

- *The print-out may vary depending on the software version.*
- *Observe the ⇒ operating manual of the battery tester with printer - VAS 6161- .*

WARNING

It is not permissible to test or charge batteries whose colour indicator is light yellow. Do not slave/jump start the vehicle!

Danger of explosion when checking and charging or slave/ jump starting.

These batteries must be renewed.

– Select “Non-Volkswagen battery test” in the menu.
– Select “On battery terminal” or “On jump-start point”.
– Select battery type “Normal”, “AGM”, “2*6V” or “Gel”.
– Select “CCA”, “JIS”, “DIN”, “SAE”, “IEC” or “EN” norm.
– Select battery value.
– Measure temperature. Hold temperature sensor about 5 cm above one battery terminal until temperature stabilises.
– Start test.
– Print out test log if necessary.

2.5.5 Carrying out stock maintenance

WARNING

It is not permissible to test or charge batteries whose colour indicator is light yellow. Do not slave/jump start the vehicle!

Danger of explosion when checking and charging or slave/ jump starting.

These batteries must be renewed.

– Select “Stock maintenance” in the menu.
– Connect scanner.

Note

If no scanner is available, write vehicle identification number on test printout by hand.

– Scan in vehicle identification number.
– Select “On battery terminal” or “On jump-start point”.
– Scan in 2D code of battery or select type and make manually in menu.

Protected by copyright. Copying for private or commercial purposes, in part or in whole, is not permitted unless authorised by Volkswagen AG. Volkswagen AG does not guarantee or accept any liability with respect to the correctness of information in this document. Copyright by Volkswagen AG.
satelettronica

– Measure temperature. Hold temperature sensor about 5 cm above terminal connection until temperature stabilises.
– Start test.
– Print out test log if necessary.

2.5.6 Comments concerning test print out

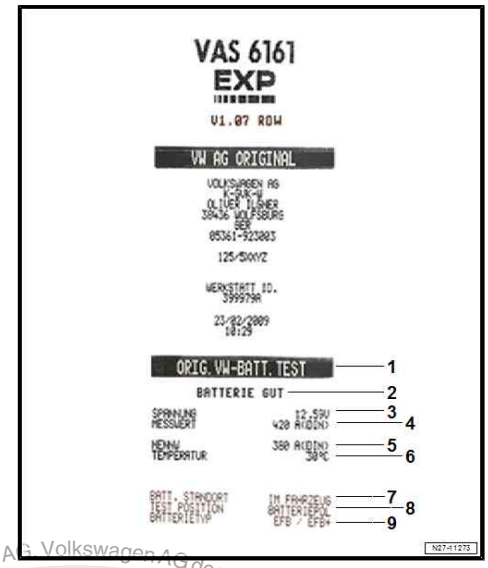

Note

- *The print-out may vary depending on software version.*
- *The test printout is required for warranty claims.*

1 - Check type.
2 - Battery test result
3 - Measured voltage
4 - Measured cold start value of battery.
5 - Nominal cold start value of battery selected on tester.
6 - Measured temperature of battery.
7 - Fitting location of battery
8 - Position of battery terminal clamp selected on tester.
9 - Selected battery technology.

2.5.7 Assessing test results

Evaluating battery test results for guarantee and service tests

Battery test results	Measure
Battery OK	No measures on battery
Battery OK - recharge.	Charge battery ⇒ page 22 . In case of discharging, look for fault
Perform current draw test	Perform current draw test ⇒ page 20 . Fully charge battery ⇒ page 22 and repeat test.
Renew battery	Disconnect battery and repeat test. The result “Renew battery” may be caused by a weak cable contact.
Battery cell defective - renew.	Renew battery
Check connection.	Connect cable directly to battery and not to jump start terminal.
Battery dead	Renew battery

Evaluating battery test results for maintenance test

Battery test results	Measure
Battery OK	No measure
Charge battery immediately.	Charge battery fully ⇒ page 22 .
Mark as defective.	Mark as defective.

Protected by copyright. Copying and distribution is not permitted unless authorised by Volkswagen AG. Volkswagen AG does not guarantee or accept any liability with respect to the correctness of information in this document. Copyright by Volkswagen AG.
satelettronica

Battery test results	Measure
Check tester connection.	Disconnect battery and repeat test. The result “Check tester connection” may be caused by a weak cable contact.
Check connection.	Connect cable directly to battery and not to jump start terminal.
Noises	Wait until measured value appears on display.
Battery dead	Renew battery

2.6 Midtronics - MCR340V- battery tester only for USA/Canada vehicles

General description ⇒ page 16

Performing battery test with Midtronics - MCR340V- battery tester ⇒ page 17

Dealing with problems with Midtronics - MCR340V- battery tester ⇒ page 19

2.6.1 General description

WARNING

Danger of injury.

Before working on the battery, read through the warning and safety regulations carefully, and comply with them ⇒ page 3 .

Dispose of electrolyte (mixture of sulphuric acid and water) safely! Waste electrolyte is only allowed to be disposed of at appropriately indicated collecting points. Comply with the locally applicable disposal guidelines.

Do not test batteries that are liberating gas. Otherwise, there is a danger of explosion.

WARNING

It is not permissible to test or charge batteries whose magic eye shows light yellow. Do not slave/jump start the vehicle!

Danger of explosion when checking and charging or slave/jump starting.

These batteries must be renewed.

Note

To prevent damage to the battery and vehicle, note the types of battery and the remarks given ⇒ page 1 .

Batteries in VW vehicles are only allowed to be tested with battery testers approved by VW. In the USA/Canada, it is permitted for the Midtronics - MCR340V- battery tester to be used.

Read all the information about safety, set-up and operation in the operating instructions for the Midtronics - MCR340V- battery tester and follow the instructions to the letter.

Protected by copyright. Copying for private or commercial purposes, in part or in whole, is not permitted unless authorised by Volkswagen AG. Volkswagen AG does not guarantee or accept any liability with respect to the correctness of information in this document. Copyright by Volkswagen AG.
satelettronica

Refer to ⇒ Self-study programme No. ; Vehicle batteries for more information.

The following charging and analysis procedures apply to all batteries, all battery installation locations (engine compartment or luggage compartment) and battery application purposes (starter battery or second/convenience battery).

Always comply with the safety regulations, the regulations for setting up the battery tester, the display menu/display buttons, LEDs and the operating procedures described in the ⇒ operating manual MCR340V .

Note

Observe and comply with all subsections, remarks and references to the vehicle and battery type, etc. to be tested.

2.6.2 Performing battery test with Midtronics - MCR340V- battery tester

Prerequisites:

WARNING

Before working on the battery, read through the warning and safety regulations carefully, and comply with them ⇒ page 3 .

It is not permissible to test or charge batteries whose magic eye shows light yellow. Do not slave/jump start the vehicle!

Danger of explosion when checking and charging or slave/jump starting.

These batteries must be renewed.

– Read general description ⇒ page 16 .
– Perform visual check ⇒ page 7 .
– Open bonnet or cover for other installation location of battery.
– Determine whether battery type is “Standard” or “AGM”.
– Remove covers from battery positive and negative terminals.
– Use wing covers or other kinds of cover before you use equipment in engine compartment or interior.
– Close all doors.

Note

- *Battery temperature must be at least 10 °C.*
- *For additional information, refer to the ⇒ operating manual INC 940 .*

Protected by copyright. Copying for private or commercial purposes, in part or in whole, is not permitted unless authorised by Volkswagen AG. Volkswagen AG does not guarantee or accept any liability with respect to the correctness of information in this document. Copyright by Volkswagen AG.
satelettronica

Volkswagen AG. Volkswagen AG does not guarantee or accept any liability with respect to the correctness of information in this document. Copyright by Volkswagen AG. Released by copyright. Copying for private or commercial purposes, in part or in whole, is not permitted unless authorised by Volkswagen AG.

Perform test:

> **WARNING**
>
> ***It is not permissible to test or charge batteries whose magic eye shows light yellow. Do not slave/jump start the vehicle!***
>
> ***Danger of explosion when checking and charging or slave/jump starting.***
>
> ***These batteries must be renewed.***

- Switch off ignition and all electrical consumers.
- Check magic eye on batteries with magic eye ⇒ page 6 .
- Switch tester on.
- Connect red terminal “+” of tester to positive terminal.
- Connect black terminal “-” of tester to negative terminal.

Note

Ensure test clamps have a good contact!

- Select “In vehicle” or “Outside vehicle”.
- Select “Warranty test”.

Note

Use the print function of the Midtronics - MCR340- tester if the test results are required for handling warranty applications.

- Select battery type “Standard ” or “AGM”.
- Make a note of DIN value of battery (from battery sticker). Make a note of SAE value if sticker does not have any DIN value.
- Enter DIN value in tester and perform battery test ⇒ operating manual MCR340V .
- If you are using SAE value, access “Miscellaneous” menu and change from “DIN” to “SAE” ⇒ operating manual MCR340V .

Note

Always use DIN value from battery sticker! Otherwise, test result will be falsified.

2.6.3 Assessing test results

Results of battery test:

Battery test results	Measure
Battery OK	None
Good - charge	Charge battery ⇒ page 72 .
Use Incharge	Charge battery ⇒ page 72 .
Renew battery	Renew battery ⇒ Electrical system; Rep. gr. 27 ; Removing and installing battery

satelettronica

Battery test results	Measure
Battery cell defective	Renew battery ⇒ Electrical system; Rep. gr. 27 ; Removing and installing battery

2.6.4 Dealing with problems with Midtronics - MCR340V- battery tester

Under certain circumstances, the display may show errors or messages according to status.

The most frequent display messages are listed below, together with suggested solutions.

Note

For messages not listed here, please refer to ⇒ operating manual MCR340V .

Display message	Measure
No display	– Check whether terminals of battery tester are firmly connected to battery terminals. – Check battery terminals are tightened according to regulations and do not have corrosion. – Charge battery ⇒ page 72 .
System noise	– Switch off all electrical consumers. – Wait until all electrical loads monitored by on-board supply control unit have switched off. Pull out ignition key. – Disconnect any suspect electrical equipment not connected to on-board supply as standard.

Wait a few minutes and test again ⇒ page 17 .

Note

If you have performed test at jump-start point and message does not disappear, perform test directly on battery.

Copyright by Volkswagen AG. Protected by copyright. Copying for private or commercial purposes, in part or in whole, not permitted unless authorised by Volkswagen AG. Volkswagen AG does not guarantee or accept any liability with respect to the correctness of information in this document.
satelettronica

2.7 Current draw test

WARNING

It is not permissible to test or charge batteries whose magic eye shows light yellow. Do not slave/jump start the vehicle!

Danger of explosion when checking and charging or slave/jump starting.

These batteries must be renewed.

Note

- *Ensure that the correct charging mode is set on the charger so that the current draw test is not falsified.*
- *VAS 5095A* ⇒ page 23
- *VAS 5900* ⇒ page 28
- *VAS 5900 A* ⇒ page 40
- *VAS 5903* ⇒ page 48
- *VAS 5908* ⇒ page 63

To quickly ascertain the state of discharged batteries, the battery current draw test whilst charging helps to determine whether the battery must be replaced or fully recharged.

Note

For battery tester with printer - VAS 6161- , the current draw test must always be performed when the test result "Perform current draw test" appears on the display.

The current draw test should always be carried out if

- The result of the test with battery tester with printer - VAS 6161- gave the following result:

1 - Perform current draw test

Performing a current draw test whilst charging the battery will quickly establish whether a partly or fully discharged battery ⇒ page 77 can be recharged to return it to a serviceable condition.

Test requirements:

- When charging the battery, its temperature must be at least ≥ +10 °C.
- The charger must be capable of outputting a charge current of at least 30 A, as for example with VAS 5095A, VAS 5900, VAS 5903
- The battery's current draw must be measured with a current pick-up clamp, e.g. VAS 5051B/7, when charging with battery charger - VAS 5095A- . Battery charger - VAS 5900- and battery charger - VAS 5903- display the current draw on the unit. Battery charger - VAS 5900- performs the current draw test automatically with menu guidance.

– Connect battery to battery charger and start charging sequence.

Protected by copyright. Copying for private or commercial purposes, in part or in whole, is not permitted unless authorised by Volkswagen AG. Volkswagen AG does not guarantee or accept any liability with respect to the correctness of information in this document. Copyright by Volkswagen AG.
satelettronica

– Measure charge current of battery after 5 minutes.

Test result:

If the current draw A is higher than 10% of the nominal capacity (e.g. > 6.1 A for a 61 Ah battery), fully charge battery and test again.

Note

For Eos with two 6 V absorbent glass mat batteries, the charge current must only be 5 % higher than the nominal capacity of the battery. Example for Eos: the 50 Ah battery must have a charge current higher than 2.5 A after 5 minutes of starting the charging sequence.

– Fully charge the battery when the charge current is higher than 10% of the nominal capacity (observe exception for Eos in above note).

– Perform battery test after allowing battery to rest for two hours ⇒ page 12 .

If the charge current, in amperes, lies below 10 % of the nominal capacity after 5 minutes of starting the charging sequence (5 % for the 2 x 6 volt batteries in Eos) (example for 50 Ah battery < 5 A), renew battery. For warranty and goodwill cases, please complete the battery test sheet.

Protected by copyright. Copying for private or commercial purposes, in part or in whole, is not permitted unless authorised by Volkswagen AG. Volkswagen AG does not guarantee or accept any liability with respect to the correctness of information in this document. Copyright by Volkswagen AG.

satelettronica

3 Charging the battery

Note

- *A charger with a charge current of at least 70A is required if the software is updated or flashed in a vehicle to prevent problems during updating and flashing.*
- *"VAS 5900 A"* ⇒ *"3.3 Battery charger VAS 5900 A ", page 40*
- *"VAS 5903"* ⇒ *"3.4 Battery charger VAS 5903 ", page 48*
- *"VAS 5908"* ⇒ *"3.6 Battery charger VAS 5908 ", page 63*

WARNING

Danger of injury! Observe warning notices and safety regulations ⇒ page 3 !

Caution

To prevent damage to the battery or vehicle, read the information about the types of battery ⇒ page 1 .

WARNING

It is not permissible to test or charge batteries whose magic eye shows light yellow. Do not slave/jump start the vehicle!

Danger of explosion when checking and charging or slave/jump starting.

These batteries must be renewed.

3.1 Battery charger - VAS 5095 A-

Note

- *A charger with a charge current of at least 70A is required if the software is updated or flashed in a vehicle to prevent problems during updating and flashing.*
- *"VAS 5903"* ⇒ *"3.4 Battery charger VAS 5903 ", page 48*
- *"VAS 5908"* ⇒ *"3.6 Battery charger VAS 5908 ", page 63*

This chapter describes the basic functions of the battery charger - VAS 5095 A- . For additional information refer to ⇒ operating instructions for battery charger - VAS 5095 A- .

Protected by copyright. Copying for private or commercial purposes, in part or in whole, is not permitted unless authorised by Volkswagen AG. Volkswagen AG does not guarantee or accept any liability with respect to the correctness of information in this document. Copyright by Volkswagen AG.
satelettronica

Protected by copyright. Copying for private or commercial purposes, in part or in whole, is not permitted unless authorised by Volkswagen AG. Volkswagen AG does not guarantee or accept any liability with respect to the correctness of information in this document. Copyright by Volkswagen AG.

Note

- *The effective charge current can not be read on these units. The charge current must be read externally using a pick-up clamp.*
- *Observe ⇒ operating instructions for battery charger - VAS 5095 A- .*

3.1.1 Description of battery charger - VAS 5095 A-

Note

- *A charger with a charge current of at least 70A is required if the software is updated or flashed in a vehicle to prevent problems during updating and flashing.*
- *"VAS 5903"* *⇒ "3.4 Battery charger VAS 5903 ", page 48*
- *"VAS 5908"* *⇒ "3.6 Battery charger VAS 5908 ", page 63*

Charge current of charger: 12 A.

The battery charger - VAS 5095- is suitable for charging all 12V batteries supplied by Volkswagen.

The battery charger charges without peaks in amperage or voltage. This will not adversely effect the on-board electronics. The battery can remain in the vehicle while it is being charged and need not be disconnected.

Battery charger - VAS 5095 A-

1 - ON / OFF switch (0 = charger OFF)

2 - Charge current indicator (I > 12 A)

3 - Charge current indicator, battery partially charged > 90 %

4 - Trickle charge mode; lights up green when battery is fully charged

5 - Malfunction indicator

6 - Support mode indicator

7 - Support mode/normal mode changer-over switch

8 - Charger cable, red terminal "+", black terminal "-"

9 - Battery type change-over switch (on base of charger unit)

3.1.2 Charging battery with battery charger - VAS 5095 A-

Note

- *A charger with a charge current of at least 70A is required if the software is updated or flashed in a vehicle to prevent problems during updating and flashing.*
- *"VAS 5903"* *⇒ "3.4 Battery charger VAS 5903 ", page 48*
- *"VAS 5908"* *⇒ "3.6 Battery charger VAS 5908 ", page 63*

satelettronica

WARNING

Danger of injury! Observe warning notices and safety regulations ⇒ page 3 !

Special tools and workshop equipment required

- Battery charger - VAS 5095 A-

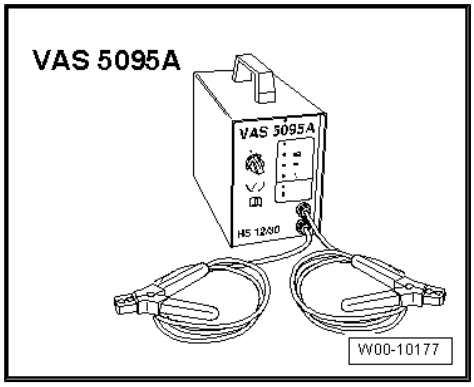

Caution

Always set battery type 2.4 V/C (volts/battery cell) when charging! This applies for all batteries.

Note

The battery must have a temperature of at least 10 °C.

WARNING

It is not permissible to test or charge batteries whose magic eye shows light yellow. Do not slave/jump start the vehicle!

Danger of explosion when checking and charging or slave/jump starting.

These batteries must be renewed.

– Switch off ignition and all electrical consumers.
– Check setting for battery type on type of battery switch ⇒ page 23 . Must be set to 2.4 V/C (volts/battery cell).
– Connect red terminal clamp “+” of charger unit to positive terminal on battery.

Note

In vehicles with start/stop function and battery monitor control unit - J367- fitted, black terminal clamp “–” must be connected to body earth. Connecting it to battery negative terminal will cause start/stop system to malfunction.

– Connect black terminal clamp “–” of battery charger to negative terminal.

Protected by copyright. Copyright by Volkswagen AG. Volkswagen AG does not guarantee or accept any liability with respect to the correctness of information in this document. Copyright by Volkswagen AG. Unless authorised by Volkswagen AG, Volkswagen AG does not guarantee or accept any liability with respect to the correctness of information in this document. Copyright by Volkswagen AG.
satelettronica

– Switch on battery charger ⇒ page 23 .

The charge current indicators ⇒ page 23 -2- and -3- light up yellow. If only the yellow light emitting diode (LED) -3- lights up, battery is partially discharged (approx. 90 %).

If the green LED also lights up ⇒ page 23 -4-, the charger has switched to trickle charge mode. The battery is fully charged.

– Switch off charging unit ⇒ page 23 .

– Remove charger unit terminals from battery terminals.

3.1.3 Charging totally discharged battery with battery charger - VAS 5095 A-

Note

- *A charger with a charge current of at least 70A is required if the software is updated or flashed in a vehicle to prevent problems during updating and flashing.*
- *"VAS 5903" ⇒ "3.4 Battery charger VAS 5903 ", page 48*
- *"VAS 5908" ⇒ "3.6 Battery charger VAS 5908 ", page 63*

WARNING

Danger of injury! Observe warning notices and safety regulations ⇒ page 3 !

The charger unit automatically recognises totally discharged batteries and initiates a gentle charging procedure with a low charging current. The charge current is automatically adapted to suit the charge condition of the battery.

Note

- *Observe notes in chapter ⇒ page 77 .*
- *Totally discharged batteries in unregistered vehicles must be exchanged prior to delivery. Preliminary damage cannot be excluded.*
- *The battery voltage must be at least 0.6 V.*

WARNING

It is not permissible to test or charge batteries whose magic eye shows light yellow. Do not slave/jump start the vehicle!

Danger of explosion when checking and charging or slave/jump starting.

These batteries must be renewed.

– Charge battery ⇒ page 23 .

Volkswagen AG. Volkswagen AG does not guarantee or accept any liability with respect to the correctness of information in this document. Copyright by Volkswagen AG.
Protected by copyright. Copying for private, commercial purposes, in part or whole, is not permitted unless authorised by Volkswagen AG.
satelettronica

3.1.4 Charging battery in support mode with battery charger - VAS 5095A-

Note

- *A charger with a charge current of at least 70A is required if the software is updated or flashed in a vehicle to prevent problems during updating and flashing.*
- *"VAS 5903"* ⇒ *"3.4 Battery charger VAS 5903 ", page 48*
- *"VAS 5908"* ⇒ *"3.6 Battery charger VAS 5908 ", page 63*

General notes:

The support mode provides the on-board supply with power when the battery is removed or disconnected.

For further information, refer to the ⇒ operating manual VAS 5095A .

The support mode is suitable in the following situations:

- Support mode of on-board supplies without installed battery
- Power conservation when renewing the battery
- Ancillaries test without battery

WARNING

Danger of injury! Observe warning notices and safety regulations ⇒ *page 3* *!*

WARNING

It is not permissible to test or charge batteries whose magic eye shows light yellow. Do not slave/jump start the vehicle!

Danger of explosion when checking and charging or slave/jump starting.

These batteries must be renewed.

– Switch off ignition and all electrical consumers.

Caution

- *The terminal polarity protection in operating mode "charging totally discharged batteries/support mode" is not active. Connect battery charger terminal clamps correctly to battery terminals.*
- *It can cause sparks through a short-circuit.*
- *Danger of explosion*
- *Ensure charger terminal clamps are seated securely.*
- *Do not press* START / STOP *button when charger unit cables are connected incorrectly. The charger unit may be damaged.*

– Remove battery.

Protected by copyright. Copyright by Volkswagen AG. Volkswagen AG does not guarantee or accept any liability with respect to the correctness of information in this document. Copyright by Volkswagen AG.
satelettronica

Caution

When battery is removed, ensure there is no contact between terminal clamp connected to positive clamp of battery and body earth. Also ensure there is no contact between battery clamps.

– Connect red terminal clamp "+" to positive terminal of vehicle.

Note

In vehicles with start/stop function and battery monitor control unit - J367- fitted, black terminal clamp "–" must be connected to body earth. Connecting it to battery negative terminal will cause start/ stop system to malfunction.

– Connect black terminal clamp "-" to negative terminal of vehicle.

– Check setting for battery type on normal/support mode switch ⇒ page 23 . It must be switched on support mode.

– Check polarity of charger unit cables.

– Switch on battery charger.

The battery charger starts with support mode.

End battery support mode:

– Switch off battery charger.

– Disconnect black terminal clamp "–" of charger unit from negative terminal of vehicle.

– Disconnect red terminal clamp "+" of charger unit from positive terminal of vehicle.

– Pull charger plug out of battery charger.

3.1.5 Charging battery in trickle charge mode with battery charger - VAS 5095 A-

Note

- *A charger with a charge current of at least 70A is required if the software is updated or flashed in a vehicle to prevent problems during updating and flashing.*
- *"VAS 5903"* *⇒ "3.4 Battery charger VAS 5903 ", page 48*
- *"VAS 5908"* *⇒ "3.6 Battery charger VAS 5908 ", page 63*

WARNING

Danger of injury! Observe warning notices and safety regulations *⇒ page 3* *!*

Protected by copyright. Copying for private or commercial purposes, in part or in whole, is not permitted unless authorised by Volkswagen AG. Volkswagen AG does not guarantee or accept any liability with respect to the correctness of information in this document. Copyright by Volkswagen AG.

satelettronica

WARNING

It is not permissible to test or charge batteries whose magic eye shows light yellow. Do not slave/jump start the vehicle!

Danger of explosion when checking and charging or slave/ jump starting.

These batteries must be renewed.

In trickle charge mode the battery charger - VAS 5095 A- ensures that the battery is charged correctly and is maintained in fully charged condition.

– Proceed as for charging battery ⇒ page 23 .

Note

- *When a battery is being charged in trickle charge mode and an electrical consumer draws current from the battery, the battery charger - VAS 5095 A- automatically compensates the charge.*
- *The trickle charge can be continued for an unlimited period.*
- *The battery is always ready for use.*

3.2 Battery charger - VAS 5900-

Note

- *A charger with a charge current of at least 70A is required if the software is updated or flashed in a vehicle to prevent problems during updating and flashing.*
- *"VAS 5903"* *⇒ "3.4 Battery charger VAS 5903 ", page 48*
- *"VAS 5908"* *⇒ "3.6 Battery charger VAS 5908 ", page 63*

WARNING

Danger of injury! Observe warning notices and safety regulations ⇒ page 3 !

WARNING

It is not permissible to test or charge batteries whose magic eye shows light yellow. Do not slave/jump start the vehicle!

Danger of explosion when checking and charging or slave/ jump starting.

These batteries must be renewed.

This chapter describes the basic functions of the battery charger - VAS 5900- . For additional information refer to ⇒ operating instructions for battery charger - VAS 5900- .

Copyright by Volkswagen AG. Volkswagen AG does not guarantee or accept any liability with respect to the correctness of information in this document. Copying for private or commercial purposes, in part or in whole, is not permitted unless authorised by Volkswagen AG.
satelettronica

Note

- *The effective charge current can be read directly on this battery charger.*
- *Observe ⇒ operating instructions for battery charger - VAS 5900- .*

3.2.1 Description of battery charger - VAS 5900-

Note

- *A charger with a charge current of at least 70A is required if the software is updated or flashed in a vehicle to prevent problems during updating and flashing.*
- *"VAS 5903"* *⇒ "3.4 Battery charger VAS 5903 ", page 48*
- *"VAS 5908"* *⇒ "3.6 Battery charger VAS 5908 ", page 63*

Charge current of charger: 35 A.

The battery charger - VAS 5900- is suitable for charging all 12V batteries supplied by Volkswagen.

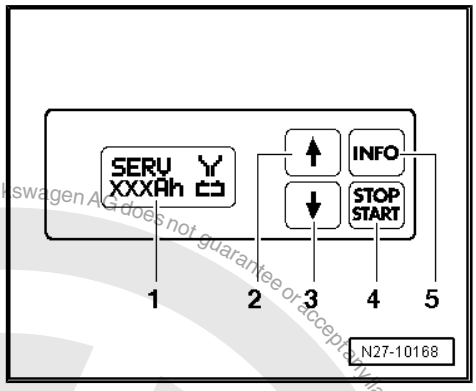

Battery charger - VAS 5900-

1 - Display

2 - Adjustment button "Up" ↑

3 - Adjustment button "Down" ↓

4 - START / STOP

5 - INFO

3.2.2 Charging battery with battery charger - VAS 5900-

Note

- *A charger with a charge current of at least 70A is required if the software is updated or flashed in a vehicle to prevent problems during updating and flashing.*
- *"VAS 5903"* *⇒ "3.4 Battery charger VAS 5903 ", page 48*
- *"VAS 5908"* *⇒ "3.6 Battery charger VAS 5908 ", page 63*

WARNING

Danger of injury! Observe warning notices and safety regulations ⇒ page 3 !

Protected by copyright. Copying for private or commercial purposes, in part or in whole, is not permitted unless authorised by Volkswagen AG. Volkswagen AG does not guarantee or accept any liability with respect to the correctness of information in this document. Copyright by Volkswagen AG.
satelettronica

Protected by copyright. Copying for private or commercial purposes, part or whole is not permitted unless authorised by Volkswagen AG. Volkswagen AG does not guarantee or accept any liability with respect to the correctness of information. Copyright by Volkswagen AG.

WARNING

It is not permissible to test or charge batteries whose magic eye shows light yellow. Do not slave/jump start the vehicle!

Danger of explosion when checking and charging or slave/jump starting.

These batteries must be renewed.

Special tools and workshop equipment required

- Battery charger - VAS 5900-

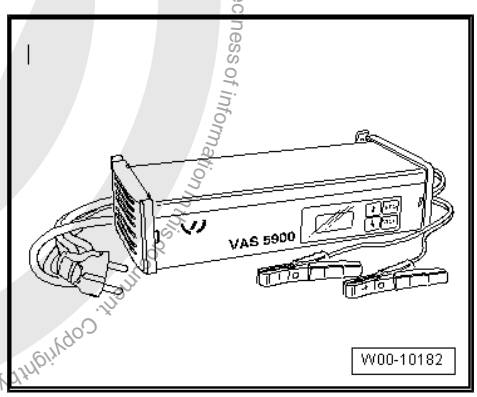

Note

The battery must have a temperature of at least 10 °C.

– Switch off ignition and all electrical consumers.

– Connect charger plug to battery charger. The last selected type of battery will appear on display.

– Set battery to respective operating mode with INFO.

In the display the symbol -1- for “standard charge for wet batteries” or symbol -2- for “standard charge for gel/absorbent glass mat batteries” will appear.

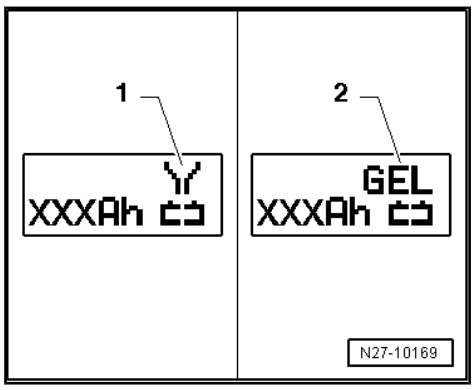

– Set battery capacity (Ah) of battery to be charged using respective button (“Up” ↑ or “Down” ↓).

– Connect red terminal clamp “+” to positive terminal on battery.

Note

In vehicles with start/stop function and battery monitor control unit - J367- fitted, black terminal clamp “–” must be connected to body earth. Connecting it to battery negative terminal will cause start/stop system to malfunction.

– Connect black terminal clamp “-” to negative terminal.

The charger unit recognises the voltage required for the connected battery (6 V, 12 V or 24 V) and initiates the charging sequence automatically.

satelettronica

At a charge condition of approx. 80 - 85 % the battery charger switches to the “final charge” mode. The fourth bar appears in display -1-. The battery is ready for use.

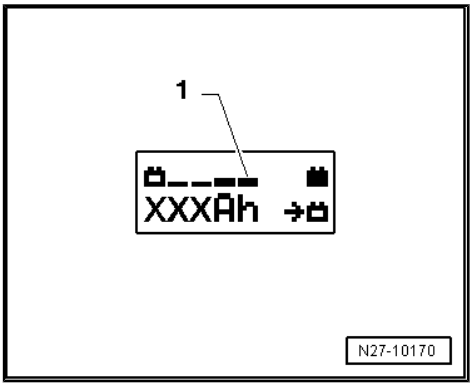

At a charge level of 100 %, all bars appear on the display.

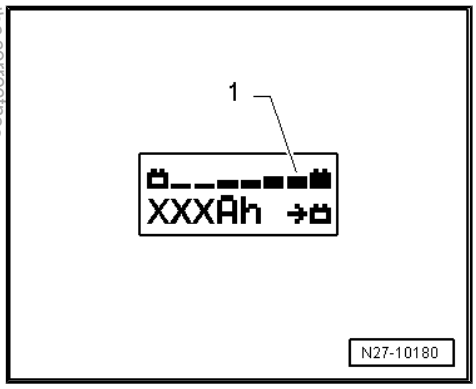

Note

- *In the case of battery type “standard charge”, the parallel operation of electrical consumers while charging is possible. The charging period will be longer.*
- *The battery charger will switch to trickle charge mode after about 1-7 hours, depending on type of battery. To achieve a 100% charge the battery should remain connected for this period.*

Possible faults and fault rectification:

1 - Displayed battery voltage is not as per nominal voltage:

– Press and hold respective button (“Up” [↑] or “Down” [↓]) until charging process starts.

2 - Displayed battery voltage is not as per nominal voltage – charging process has already started:

– Press [START / STOP] twice.

– Press and hold respective button (“Up” [↑] or “Down” [↓]) until charging process starts again.

3 - Battery charger does not detect a battery when battery voltage is less than 2 V:

Display remains unchanged.

The battery type and ampere hours (Ah) as set is displayed.

Ending battery charging sequence:

– Press [START / STOP].

– Disconnect black terminal clamp “-” of charger from negative terminal.

– Disconnect red terminal clamp “+” of charger from positive terminal on battery.

– Pull charger plug out of battery charger.

Copyright by Volkswagen AG. Copying for private or commercial purposes, in part or in whole, is not permitted unless authorised by Volkswagen AG. Volkswagen AG does not guarantee or accept any liability with respect to the correctness of information in this document.
satelettronica

3.2.3 Charging battery in service mode with battery charger - VAS 5900-

Note

- *A charger with a charge current of at least 70A is required if the software is updated or flashed in a vehicle to prevent problems during updating and flashing.*
- *"VAS 5903"* ⇒ *"3.4 Battery charger VAS 5903 ", page 48*
- *"VAS 5908"* ⇒ *"3.6 Battery charger VAS 5908 ", page 63*

WARNING

Danger of injury! Observe warning notices and safety regulations ⇒ page 3 !

Caution

The operating mode "service charge" is not permitted on VW vehicles as the voltage peaks will damage the on-board electronics.

If you nevertheless use "service charge" the battery must be disconnected from the on-board supply.

WARNING

It is not permissible to test or charge batteries whose magic eye shows light yellow. Do not slave/jump start the vehicle!

Danger of explosion when checking and charging or slave/jump starting.

These batteries must be renewed.

Caution

When charging always set the battery charger to the correct type of battery ⇒ operating instructions for battery charger - VAS 5900- !

The "service mode" is suitable for:

- *Wet batteries where the magic eye allows charging (magic eye black or green)*

The operating mode "service charge (SERV)" is only used on sulphated batteries. The battery is charged at a voltage of > 14.4 V. This can result in a partial reduction of the sulphated layer. After charging, always check the colour of the magic eye before using the battery ⇒ page 9 .

Special tools and workshop equipment required

Protected by copyright. Copying for private or commercial purposes, in part or in whole, is not permitted unless authorised by Volkswagen AG. Volkswagen AG does not guarantee or accept any liability with respect to the correctness of information in this document. Copyright by Volkswagen AG.
satelettronica

♦ Battery charger - VAS 5900-

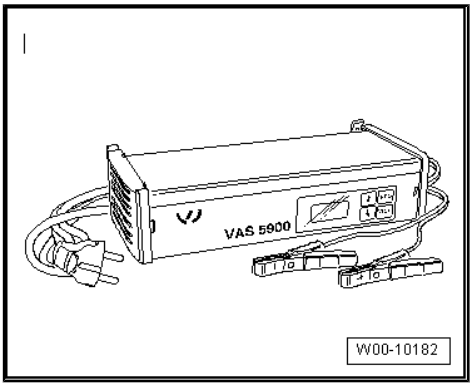

Note

The battery must have a temperature of at least 10 °C.

– Switch off ignition and all electrical consumers.

– Connect charger plug to battery charger. The last selected operating mode will appear on display ⇒ page 29 .

– Set battery to respective battery type with INFO.

In the display, the symbol -1- for “Service charge for wet batteries” or symbol -2- for “Service charge for gel/absorbent glass mat batteries” will appear.

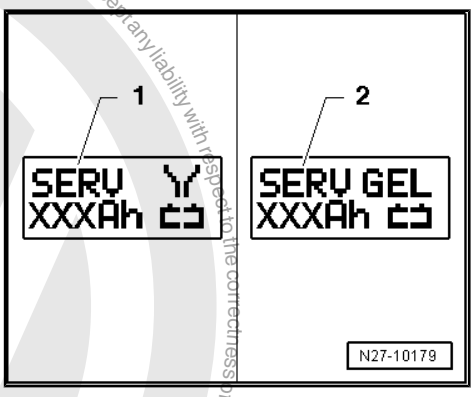

– Set battery capacity (Ah) of battery to be charged using respective button (“Up” ↑ or “Down” ↓).

– Connect red terminal clamp “+” to positive terminal on battery.

Note

In vehicles with start/stop function and battery monitor control unit - J367- fitted, black terminal clamp “–” must be connected to body earth. Connecting it to battery negative terminal will cause start/stop system to malfunction.

– Connect black terminal clamp “-” to negative terminal.

The charger unit recognises the voltage required for the connected battery (6 V, 12 V or 24 V) and initiates the charging sequence automatically.

Protected by copyright. Copyright by Volkswagen AG. Volkswagen AG does not guarantee or accept any liability with respect to the correctness of information in this document. Copyright by Volkswagen AG.
satelettronica

At a charge condition of approx. 80 - 85 % of the battery voltage, the battery charger switches to the “final charge” mode. The fourth bar appears in display -1-. The battery is ready for use.

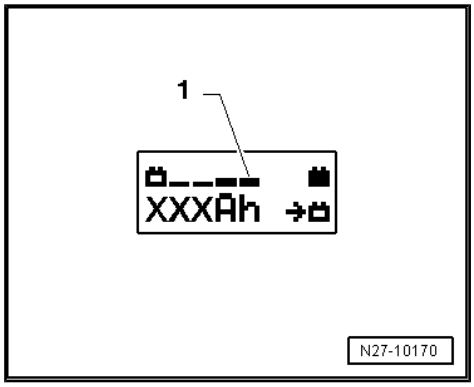

Note

The success of the “service charge” depends on the severity of the sulphation of the battery.

Possible faults and fault rectification:

1 - Displayed battery voltage is not as per nominal voltage:

– Press and hold respective button (“Up” ↑ or “Down” ↓) until charging process starts.

2 - Displayed battery voltage is not as per nominal voltage – charging process has already started:

– Press START / STOP twice.

– Press and hold respective button (“Up” ↑ or “Down” ↓) until charging process starts.

3 - Battery charger does not detect a battery when battery voltage is less than 2 V:

Display remains unchanged.

The operating mode and ampere hours (Ah) as set are displayed.

Ending battery charging sequence:

– Press START / STOP.

– Disconnect black terminal clamp “-” of charger from negative terminal.

– Disconnect red terminal clamp “+” of charger from positive terminal on battery.

– Pull charger plug out of battery charger.

3.2.4 Charging totally discharged batteries with battery charger - VAS 5900-

Note

- *A charger with a charge current of at least 70A is required if the software is updated or flashed in a vehicle to prevent problems during updating and flashing.*
- *“VAS 5903” ⇒ “3.4 Battery charger VAS 5903 ”, page 48*
- *“VAS 5908” ⇒ “3.6 Battery charger VAS 5908 ”, page 63*

WARNING

Danger of injury! Observe warning notices and safety regulations ⇒ page 3 !

Protected by copyright. Copying for private or commercial purposes, in part or in whole, is not permitted unless authorised by Volkswagen AG. Volkswagen AG does not guarantee or accept any liability with respect to the correctness of information in this document. Copyright by Volkswagen AG.
satelettronica

WARNING

It is not permissible to test or charge batteries whose magic eye shows light yellow. Do not slave/jump start the vehicle!

Danger of explosion when checking and charging or slave/ jump starting.

These batteries must be renewed.

Caution

- *The terminal polarity protection in operating mode “charging totally discharged batteries/support mode” is not active. Connect battery charger terminal clamps correctly to battery terminals.*
- *When charging always set the battery charger to the correct type of battery ⇒ operating instructions for battery charger - VAS 5900- !*
- *Totally discharged batteries are not recognised by the battery charger* *⇒ page 77* *.*
- *Do not press* **START / STOP** *button when charger unit cables are connected incorrectly. The charger unit may be damaged.*

Batteries with a voltage of less than 2 volts will not be recognised automatically by battery charger - VAS 5900- .

Special tools and workshop equipment required

- Battery charger - VAS 5900-

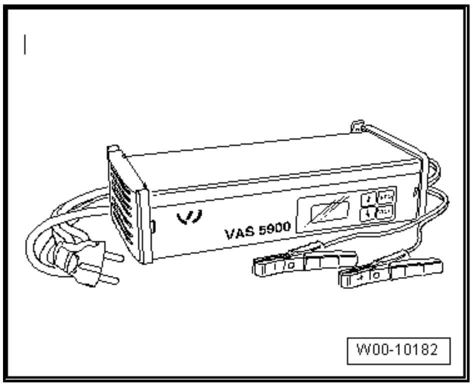

Note

- *Observe notes in chapter* *⇒ page 77* *.*
- *Totally discharged batteries in unregistered vehicles must be exchanged prior to delivery. Preliminary damage cannot be excluded.*
- *The battery must have a temperature of at least 10 °C.*

– Switch off ignition and all electrical consumers.

– Connect charger plug to battery charger. The last selected operating mode will appear on display ⇒ page 29 .

Protected by copyright. Copying for private or commercial purposes, in part or in whole, is not permitted unless authorised by Volkswagen AG. Volkswagen AG does not guarantee or accept any liability with respect to the correctness of information in this document. Copyright by Volkswagen AG.
sateletronica

– Set battery to respective battery type with INFO.

In the display, the symbol -1- for “Service charge for wet batteries” or symbol -2- for “Service charge for gel/absorbent glass mat batteries” will appear.

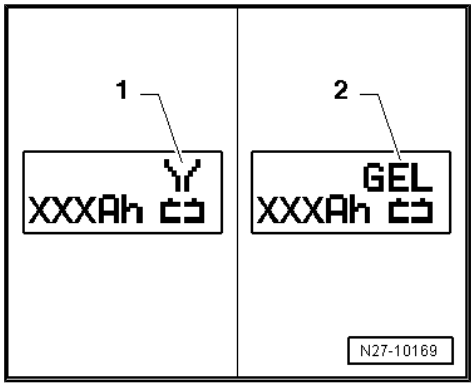

– Set battery capacity (Ah) of battery to be charged using respective button (“Up” ↑ or “Down” ↓).

– Connect red terminal clamp “+” to positive terminal on battery.

Note

In vehicles with start/stop function and battery monitor control unit - J367- fitted, black terminal clamp “–” must be connected to body earth. Connecting it to battery negative terminal will cause start/stop system to malfunction.

– Connect black terminal clamp “-” to negative terminal.

– Press START / STOP for approx. 5 seconds. The menu “charging totally discharged batteries/support mode” will be activated.

– Press respective button (“Up” ↑ or “Down” ↓) to set required battery voltage (6 V, 12 V or 24 V).

Note

If a button is not pressed within 5 seconds the charger will return to the main menu (select operating mode).

– Confirm the selected battery voltage with START / STOP.

Then follows the enquiry for "is charger cable terminal polarity correct".

– Check polarity of charger unit cables.

– Confirm polarity of charger unit cables with START / STOP.

Charger will start charging sequence for totally discharged battery.

Ending battery charging sequence:

– Press START / STOP.

– Disconnect black terminal clamp “-” of charger from negative terminal.

– Disconnect red terminal clamp “+” of charger from positive terminal on battery.

– Pull charger plug out of battery charger.

Protected by copyright. Copying for private or commercial purposes, in part or in whole, is not permitted unless authorised by Volkswagen AG. Volkswagen AG does not guarantee or accept any liability with respect to the correctness of information in this document. Copyright by Volkswagen AG.
satelettronica

3.2.5 Charging battery in support mode with battery charger - VAS 5900-

Note

- *A charger with a charge current of at least 70A is required if the software is updated or flashed in a vehicle to prevent problems during updating and flashing.*
- *"VAS 5903"* ⇒ *"3.4 Battery charger VAS 5903 ", page 48*
- *"VAS 5908"* ⇒ *"3.6 Battery charger VAS 5908 ", page 63*

General notes:

The support mode provides the on-board supply with power when the battery is removed or disconnected.

For further information, refer to the ⇒ operating manual VAS 5900 .

The support mode is suitable in the following situations:

- Support mode of on-board supplies without installed battery
- Power conservation when renewing the battery
- Ancillaries test without battery

WARNING

Danger of injury! Observe warning notices and safety regulations ⇒ *page 3* *!*

WARNING

It is not permissible to test or charge batteries whose magic eye shows light yellow. Do not slave/jump start the vehicle!

Danger of explosion when checking and charging or slave/jump starting.

These batteries must be renewed.

– Switch off ignition and all electrical consumers.

Caution

- *The terminal polarity protection in operating mode "charging totally discharged batteries/support mode" is not active. Connect battery charger terminal clamps correctly to battery terminals.*
- *It can cause sparks through a short-circuit.*
- *Danger of explosion*
- *Ensure charger terminal clamps are seated securely.*
- *Do not press* START / STOP *button when charger unit cables are connected incorrectly. The charger unit may be damaged.*

– Remove battery.

Protected by copyright. Copying for private or commercial purposes, in part or in whole, is not permitted unless authorised by Volkswagen AG. Volkswagen AG does not guarantee or accept any liability with respect to the correctness of information in this document. Copyright by Volkswagen AG.
satelettronica

– Connect charger plug to battery charger. The last selected operating mode will appear on display ⇒ page 29 .

Caution

When battery is removed, ensure there is no contact between terminal clamp connected to positive clamp of battery and body earth. Also ensure there is no contact between battery clamps.

– Connect red terminal clamp “+” to positive terminal of vehicle.

Note

In vehicles with start/stop function and battery monitor control unit - J367- fitted, black terminal clamp “–” must be connected to body earth. Connecting it to battery negative terminal will cause start/stop system to malfunction.

– Connect black terminal clamp “-” to negative terminal of vehicle.

– Press START / STOP for approx. 5 seconds. The menu “charging totally discharged batteries/support mode” will be activated.

– Press respective button (“Up” ↑ or “Down” ↓) to set required battery voltage (6 V, 12 V or 24 V).

Note

If a button is not pressed within 5 seconds the charger will return to the main menu (select operating mode).

– Confirm the selected battery voltage with START / STOP.

Then follows the enquiry for "is charger cable terminal polarity correct".

– Check polarity of charger unit cables.

– Confirm polarity of charger unit cables with START / STOP.

The battery charger starts with support mode.

End battery support mode:

– Press START / STOP.

– Disconnect black terminal clamp “–” of charger unit from negative terminal of vehicle.

– Disconnect red terminal clamp “+” of charger unit from positive terminal of vehicle.

– Pull charger plug out of battery charger.

Protected by copyright. Copying for private or commercial purposes, in part or in whole, is not permitted unless authorised by Volkswagen AG. Volkswagen AG does not guarantee or accept any liability with respect to the correctness of information in this document. Copyright by Volkswagen AG.
satelettronica

3.2.6 Charging battery in trickle charge mode with battery charger - VAS 5900-

Note

- *A charger with a charge current of at least 70A is required if the software is updated or flashed in a vehicle to prevent problems during updating and flashing.*
- *"VAS 5903"* ⇒ *"3.4 Battery charger VAS 5903 ", page 48*
- *"VAS 5908"* ⇒ *"3.6 Battery charger VAS 5908 ", page 63*

Note

- *When a battery is being charged in the trickle charge mode and an electrical consumer draws current from the battery, the battery charger - VAS 5900- automatically compensates the charge.*
- *The trickle charge can be continued for an unlimited period.*
- *The battery is always ready for use.*
- *Observe battery manufactures maintenance instructions!*

WARNING

Danger of injury! Observe warning notices and safety regulations ⇒ page 3 !

WARNING

It is not permissible to test or charge batteries whose magic eye shows light yellow. Do not slave/jump start the vehicle!

Danger of explosion when checking and charging or slave/jump starting.

These batteries must be renewed.

When the battery is fully charged the battery charger - VAS 5900- switches to trickle charge mode.

– Proceed as for charging battery ⇒ page 29 .

At a charge level of 100 %, all bars appear on the display.

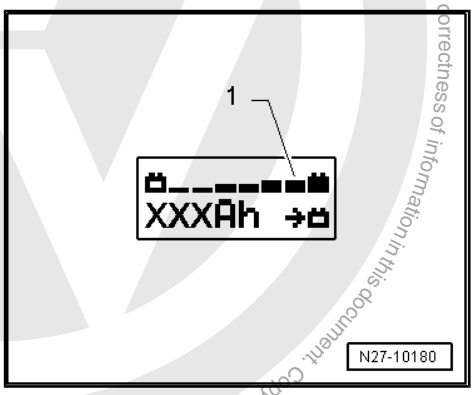

Protected by copyright. Copying for private or commercial purposes, in part or in whole, is not permitted unless authorised by Volkswagen AG. Volkswagen AG does not guarantee or accept any liability with respect to the correctness of information in this document. Copyright by Volkswagen AG.
satelettronica

3.3 Battery charger - VAS 5900 A-

⇒ “3.3.1 General description - battery charger VAS 5900 A ”, page 40

⇒ “3.3.2 Charging battery with battery charger VAS 5900 A ”, page 41

⇒ “3.3.3 Charging totally discharged battery with battery charger VAS 5900 A ”, page 42

⇒ “3.3.4 Charging battery in support mode with battery charger VAS 5900 A ”, page 45

⇒ “3.3.5 Mains supply mode with battery charger VAS 5900 A ”, page 46

3.3.1 General description - battery charger - VAS 5900 A-

WARNING

Danger of injury! Observe warning instructions and safety regulations ⇒ page 3 .

This chapter describes the basic functions of the battery charger - VAS 5900 A- . For additional information refer to ⇒ operating instructions for battery charger - VAS 5900 A- .

Product characteristics

- Fully automatic charging using the Plug & Charge feature.
- Simple user guidance and maximum operational safety thanks to the animated graphical display. All functions and charging data can be configured, read and are clearly presented on the display.
- Automatic pre-selection of battery voltage (6 V, 12 V and 24 V).
- Robust and compact housing for flexible use in the workshop.
- Pluggable charging and power supply cables (in different lengths).
- Edge protection for high stability and protection against paintwork damage.
- For charging or trickle-charging conventional lead-acid, lead-calcium/silver, or absorbent glass mat batteries (AGM, MF) as well as of maintenance-free lead-gel batteries without having to disconnect the batteries from the vehicle’s electrical system.
- Can be used on batteries with capacities of 3 to 350 Ah.
- Optional USB interface for software updates of the battery charging system ensures a long-term and future-proof use.
- Based on the active inverter technology.
- Full protection of the vehicle, the onboard electronics and battery thanks to electronics protection, short-circuit protection, electronic inverse polarity protection, safety shut-off and thermal overload protection.

Applications

- Charging: automatic charging and buffering of parallel consumers during the restricted service time.

Protected by copyright. Copyright by Volkswagen AG. Volkswagen AG does not guarantee or accept any liability with respect to the correctness of information in this document. Copyright by Volkswagen AG. Commercial use or distribution of the data is not permitted, except with the express authorisation of Volkswagen AG.
satelettronica

- Diagnosis and software update: in buffer mode, the parallel consumers are supplied with power during the diagnosis or during software updates.
- Battery change: in support mode, the user settings in the vehicle are retained, when the battery is renewed.
- In power supply mode, an external power supply without any support from the battery is provided.
- In refresh mode, totally discharged batteries are regenerated.

Operating unit on battery charger - VAS 5900 A-

1 - Graphic display

2 - Menu button

3 - Up/Down buttons

4 - Stop/start button

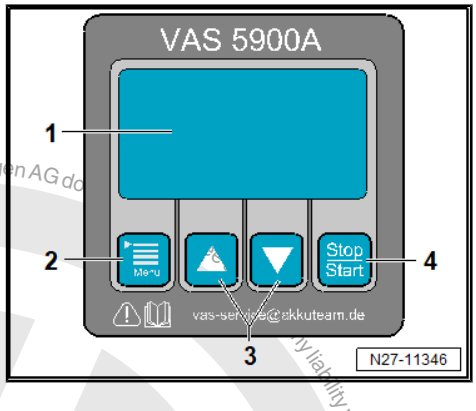

3.3.2 Charging battery with battery charger - VAS 5900 A-

Special tools and workshop equipment required

- Battery charger - VAS 5900 A-

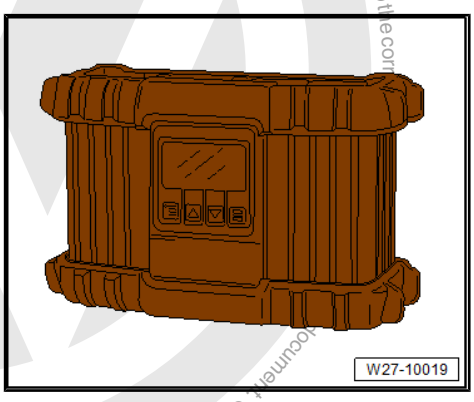

Procedure

– Connect battery charger - VAS 5900 A- to mains supply.

Charging mode is available as standard once charging unit has been connected to mains supply.

– Select Ah setting or battery type using Menu button.

– Use Up/Down buttons to enter value (e.g. 100 Ah or wet battery type).

– Connect red charging cable from battery charger - VAS 5900 A- to positive terminal of battery.

Battery removed

– Connect black charging cable from battery charger - VAS 5900 A- to negative terminal of battery.

Battery installed in vehicle

– Connect black charging cable from battery charger - VAS 5900 A- to dedicated negative jump-start connection with battery in situ.

Protected by copyright. Copying for private or commercial purposes, in part or in whole, is not permitted unless authorised by Volkswagen AG. Volkswagen AG does not give any liability with respect to the correctness of information in this document. Copyright by Volkswagen AG.
satelettronica

Battery charger automatically detects that battery is connected and starts the charging process after 5 seconds.

If battery voltage was not detected correctly, e.g. in event of exhaustively discharged battery, select battery voltage within 5 seconds as follows:

– Set correct battery voltage using Up/Down buttons.

Note

To prevent damage to the components, always ensure that the battery voltage is set correctly.

– Confirm selection with Stop/Start button.

If selection window for battery voltage does not appear, battery is exhaustively discharged. In this case, perform action on exhaustively discharged battery using battery charger - VAS 5900 A- ⇒ page 42 .

Note

Do not disconnect charging cable during charging. Danger of damage to plug sockets and connectors.

Ascending bars -1- indicate the charge level of the battery, e.g. 3 bars denote a charge level of 80%.

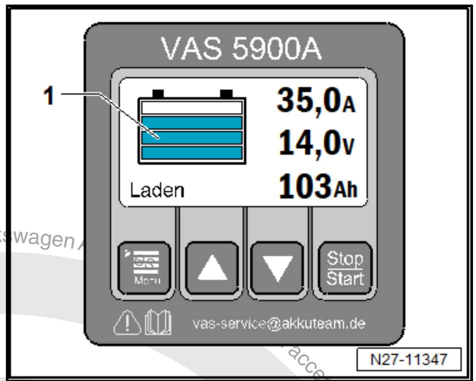

Once all 4 bars -1- are displayed permanently, the charge level is 100%.

Battery can remain connected to battery charger - VAS 5900 A- for as long as necessary.

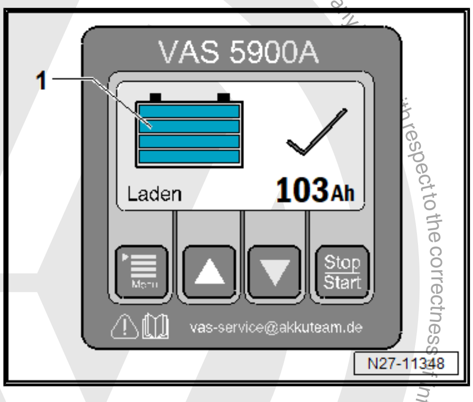

If required, interrupt/continue charging process

– Press Stop/Start button to interrupt charging process.

– Press Stop/Start button to continue charging process.

Ending charging process

– Press Stop/Start button to end charging process.

– Disconnect red charging cable from positive terminal of battery.

– Disconnect black charging cable from negative terminal of battery and/or jump-start connection.

3.3.3 Charging totally discharged battery with battery charger - VAS 5900 A-

Special tools and workshop equipment required

Protected by copyright. Copying for private or commercial purposes, in part or in whole, is not permitted unless authorised by Volkswagen AG. Volkswagen AG ... accept any ... with respect to the correctness of information in this document. Copyright by Volkswagen AG.
sateletronica

- Battery charger - VAS 5900 A-

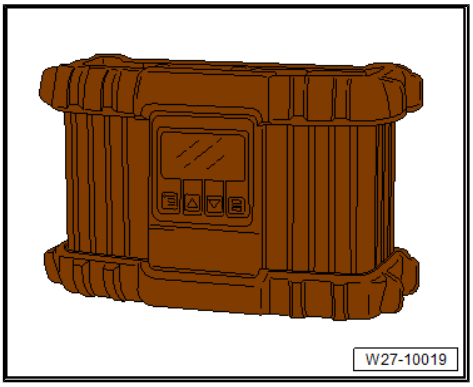

Refresh mode serves as a means of charging the battery if exhaustive discharge is likely to have extended over a longer period of time (e.g.: battery sulphated).

WARNING

Danger of injury! Observe warning instructions and safety regulations ⇒ page 3 .

WARNING

It is not permissible to test or charge batteries whose magic eye shows light yellow. Do not slave/jump start the vehicle!

Danger of explosion when checking and charging or slave/jump starting.

These batteries must be renewed.

Caution

- *The terminal polarity protection in operating mode "charging totally discharged batteries/support mode" is not active. Connect battery charger terminal clamps correctly to battery terminals.*
- *When charging always set the battery charger to the correct type of battery ⇒ operating instructions for battery charger - VAS 5900 A- !*
- *Totally discharged batteries are not recognised by the battery charger ⇒ page 77 .*
- *Do not press START / STOP button if charger unit cables are connected incorrectly. The charger unit may be damaged.*

Caution

The refresh charge mode is not permitted on VW vehicles as the voltage peaks will damage the onboard electronics.

If refresh charge mode is used nevertheless, the battery must be disconnected from the onboard supply.

Copyright by Volkswagen AG. Volkswagen AG does not guarantee or accept any liability with respect to the correctness of information in this document. Copying for private or commercial purposes, in part or in whole, is not permitted unless authorised by Volkswagen AG. Protected by copyright. Copyright by Volkswagen AG.
satelettronica

Batteries with a voltage of less than 2 volts will not be recognised automatically by battery charger - VAS 5900- .

Procedure

Note

- *Follow instructions in chapter ⇒ page 77 .*
- *The battery must have a temperature of at least 10 °C.*

– Remove battery ⇒ Electrical system; Rep. gr. 27 ; Battery; Removing and installing battery .

– Connect battery charger - VAS 5900 A- to mains supply.

– Select refresh mode using Up/Down buttons.

– Select Ah setting or battery type using Menu button.

– Use Up/Down buttons to enter value (e.g. 100 Ah or wet battery type).

– Connect red charging cable from battery charger - VAS 5900 A- to positive terminal of battery.

– Connect black charging cable from battery charger - VAS 5900 A- to negative terminal of battery.

Battery charger automatically detects that battery is connected and starts the charging process after 5 seconds.

If battery voltage was not detected correctly, e.g. in event of exhaustively discharged battery, select battery voltage within 5 seconds as follows:

– Set correct battery voltage using Up/Down buttons.

Note

To prevent damage to the components, always ensure that the battery voltage is set correctly.

– Confirm selection with Stop/Start button.

If selection window for battery voltage does not appear, battery is exhaustively discharged with a voltage of under 2 volts. A corresponding warning appears.

If battery charging is still desired despite the battery being exhaustively discharged:

– Press OK in warning message using Stop/Start button.

– In next selection window that appears, set correct battery voltage using Up/Down buttons.

Note

To prevent damage to the components, always ensure that the battery voltage is set correctly.

– Confirm selection with Stop/Start button.

Volkswagen AG does not guarantee or accept any liability with respect to the correctness of information in this document. Copyright by Volkswagen AG.
Protected by copyright. Copying for private or commercial purposes, in part or in whole, is not permitted unless authorised by Volkswagen AG.
satelettronica

Note

Do not disconnect charging cable during charging. Danger of damage to plug sockets and connectors.

Ascending bars -1- indicate the charge level of the battery, e.g. 3 bars denote a charge level of 80%.

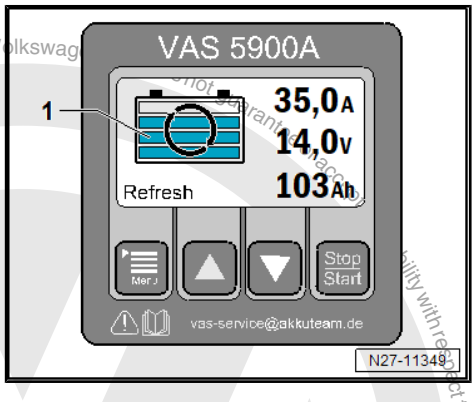

Once all 4 bars -1- are displayed permanently, the charge level is 100%.

Battery can remain connected to battery charger - VAS 5900 A- for as long as necessary.

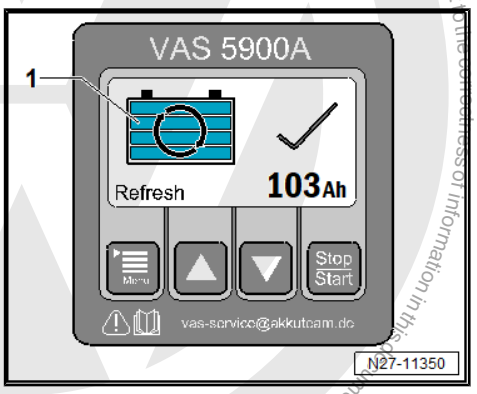

If required, interrupt/continue refresh charging process

– Press `Stop/Start` button to interrupt charging process.

– Press `Stop/Start` button to continue charging process.

Ending refresh charging process

– Press `Stop/Start` button to end charging process.

– Disconnect red charging cable from positive terminal of battery.

– Disconnect black charging cable from negative terminal on battery.

3.3.4 Charging battery in support mode with battery charger - VAS 5900 A-

Special tools and workshop equipment required

♦ Battery charger - VAS 5900 A-

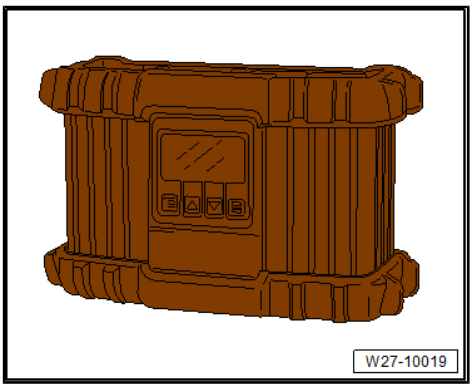

Backup power supply mode serves exclusively as a means of relieving the load on the battery during diagnosis or a software update on the vehicle. Over a longer period of time, the consumed current must be lower than the maximum output current of the charging unit as otherwise the battery will discharge. Backup power supply mode is not suitable for fully charging the battery.

Protected by copyright. Copying for private or commercial purposes, in part or in whole, is not permitted unless authorised by Volkswagen AG. Volkswagen AG does not guarantee or accept any liability with respect to the correctness of information in this document. Copyright by Volkswagen AG.
satelettronica

Copyright by Volkswagen AG. Not to be transmitted or reproduced without authorisation. Volkswagen AG does not guarantee or accept any liability with respect to the correctness of information in this document.

Procedure

– Connect battery charger - VAS 5900 A- to mains supply.

– Select backup power supply mode using Up/Down buttons.

– Connect red charging cable from battery charger - VAS 5900 A- to positive terminal of battery.

– Connect black charging cable from battery charger - VAS 5900 A- to dedicated negative jump-start connection.

Battery charger automatically detects that battery is connected and starts the charging process after 5 seconds.

If battery voltage was not detected correctly, e.g. in event of exhaustively discharged battery, select battery voltage within 5 seconds as follows:

– Set correct battery voltage using Up/Down buttons.

Note

To prevent damage to the components, always ensure that the battery voltage is set correctly.

– Confirm selection with Stop/Start button.

If selection window for battery voltage does not appear, battery is exhaustively discharged with a voltage of under 2 volts. In this case, backup power supply mode is not permissible. Replacement of the battery is recommended.

Note

Do not disconnect charging cable during backup power supply. Danger of damage to plug sockets and connectors.

If required, interrupt/continue backup power supply

– Press Stop/Start button to interrupt backup power supply.

– Press Stop/Start button to continue backup power supply.

Ending backup power supply

– Press Stop/Start button to end backup power supply.

– Disconnect red charging cable from positive terminal of battery.

– Disconnect black charging cable from negative jump-start connection.

3.3.5 Mains supply mode with battery charger - VAS 5900 A-

Special tools and workshop equipment required

satelettronica

♦ Battery charger - VAS 5900 A-

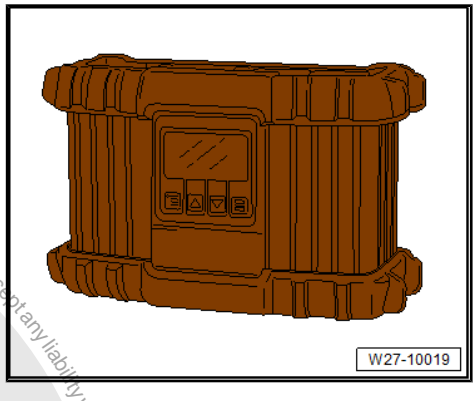

Mains supply mode serves as a means of supplying power to the electronics in the vehicle when the battery is removed. Since only the battery cables of the vehicle are connected to the battery charger - VAS 5900 A- , the battery voltage detection function is not available.

Procedure

– Connect battery charger - VAS 5900 A- to mains supply.

– Select mains supply mode using Up/Down buttons.

– Set vehicle electrical system voltage with Menu button.

Note

To prevent damage to the components, always ensure that the vehicle electrical system voltage is set correctly.

– Connect red charging cable from battery charger - VAS 5900 A- to positive battery cable of vehicle.

– Connect black charging cable from battery charger - VAS 5900 A- to negative battery cable of vehicle.

Caution

When the battery is removed, ensure there is no contact between the positive terminal clamp of charger and the body earth.

Also ensure there is no contact between individual battery terminal clamps.

– Start mains supply mode with Stop/Start button.

A security question appears on the display to determine whether the charging cables are connected correctly.

– Confirm security question with Stop/Start button and start external power supply of vehicle electronics.

Ending mains supply mode

– Press Stop/Start button to end mains supply mode.

– Disconnect red charging cable from positive battery cable of vehicle.

– Disconnect black charging cable from negative battery cable of vehicle.

Copyright by Volkswagen AG. Volkswagen AG does not guarantee or accept any liability with respect to the correctness of information in this document. Copyright by Volkswagen AG. Copying for private or commercial purposes, in part or in whole, is not permitted unless authorised by Volkswagen AG.
satelettronica

3.4 Battery charger - VAS 5903-

Note

- *A charger with a charge current of at least 70A is required if the software is updated or flashed in a vehicle to prevent problems during updating and flashing.*
- *"VAS 5903"* ⇒ *"3.4 Battery charger VAS 5903 ", page 48*
- *"VAS 5908"* ⇒ *"3.6 Battery charger VAS 5908 ", page 63*

WARNING

Danger of injury! Observe warning notices and safety regulations ⇒ page 3 !

WARNING

It is not permissible to test or charge batteries whose magic eye shows light yellow. Do not slave/jump start the vehicle!

Danger of explosion when checking and charging or slave/jump starting.

These batteries must be renewed.

This chapter describes the basic functions of the battery charger - VAS 5903- . For additional information refer to ⇒ operating instructions for battery charger - VAS 5903- .

Note

Observe ⇒ operating instructions for battery charger - VAS 5903- .

3.4.1 Description of battery charger - VAS 5903-

Note

- *A charger with a charge current of at least 70 A is required if the software is updated or flashed in a vehicle to prevent problems during updating and flashing.*
- *"VAS 5903"* ⇒ *"3.4 Battery charger VAS 5903 ", page 48*
- *"VAS 5908"* ⇒ *"3.6 Battery charger VAS 5908 ", page 63*

Charge current of charger: 70 A.

Protected by copyright. Copying for private or commercial purposes, in part or in whole, is not permitted unless authorised by Volkswagen AG. Volkswagen AG does not guarantee or accept any liability with respect to the correctness of information in this document. Copyright by Volkswagen AG.

satelettronica

The battery charger - VAS 5903- is suitable for charging all 12 V batteries supplied by Volkswagen.

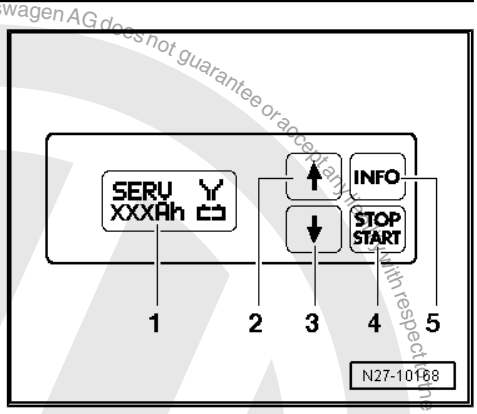

Battery charger - VAS 5903-

1 - Display

2 - Adjustment button “Up” ↑

3 - Adjustment button “Down” ↓

4 - START / STOP

5 - INFO

3.4.2 Charging battery with battery charger - VAS 5903-

Note

- *A charger with a charge current of at least 70A is required if the software is updated or flashed in a vehicle to prevent problems during updating and flashing.*
- *“VAS 5903”* *⇒ “3.4 Battery charger VAS 5903 ”, page 48*
- *“VAS 5908”* *⇒ “3.6 Battery charger VAS 5908 ”, page 63*

WARNING

Danger of injury! Observe warning notices and safety regulations ⇒ page 3 !

WARNING

It is not permissible to test or charge batteries whose magic eye shows light yellow. Do not slave/jump start the vehicle!

Danger of explosion when checking and charging or slave/jump starting.

These batteries must be renewed.

Special tools and workshop equipment required

- Battery charger - VAS 5903-

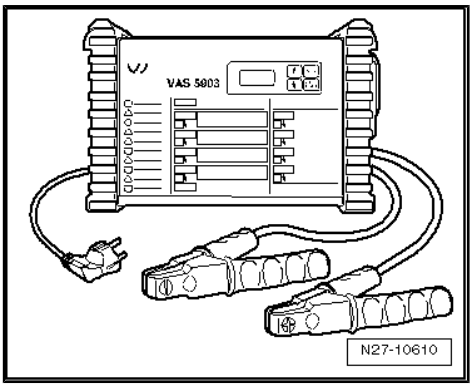

Volkswagen AG. Volkswagen AG does not guarantee or accept any responsibility with respect to the correctness of information in this document. Copyright by Volkswagen AG. Protected by copyright. Copying for private or commercial purposes, in part or in whole, is not permitted unless authorised by Volkswagen AG.
satelettronica

Note

The battery must have a temperature of at least 10 °C.

– Switch off ignition and all electrical consumers.

– Connect charger plug to battery charger. The last selected operating mode will appear on display ⇒ page 48 .

– Set battery to respective operating mode with INFO.

In the display the symbol -1- for “standard charge for wet batteries” or symbol -2- for “standard charge for gel/absorbent glass mat batteries” will appear.

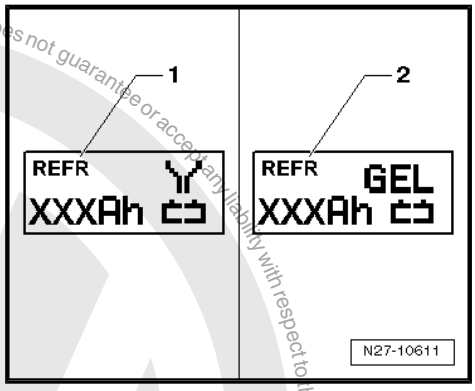

– Set battery capacity (Ah) of battery to be charged using respective button (“Up” ↑ or “Down” ↓).

– Connect red terminal clamp “+” to positive terminal on battery.

Note

In vehicles with start/stop function and battery monitor control unit - J367- fitted, black terminal clamp “–” must be connected to body earth. Connecting it to battery negative terminal will cause start/stop system to malfunction.

– Connect black terminal clamp “-” to negative terminal.

The charger unit recognises the voltage required for the connected battery (6 V, 12 V or 24 V) and initiates the charging sequence automatically.

At a charge condition of approx. 80 - 85 % the battery charger switches to the “final charge” mode. The fourth bar appears in display -1-. The battery is ready for use.

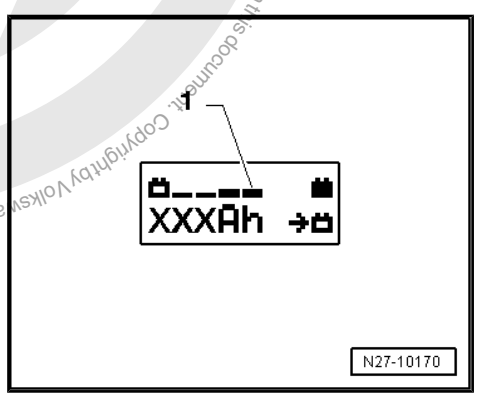

Protected by copyright. Copyright by Volkswagen AG. Volkswagen AG does not guarantee or accept any liability with respect to the correctness of information in this document. Copyright by Volkswagen AG. Reproduction in whole, is not permitted unless authorised by Volkswagen AG. Volkswagen AG does not guarantee or accept any liability with respect to the correctness of information in this document. Copyright by Volkswagen AG.

satelettronica

At a charge level of 100 %, all bars appear on the display.

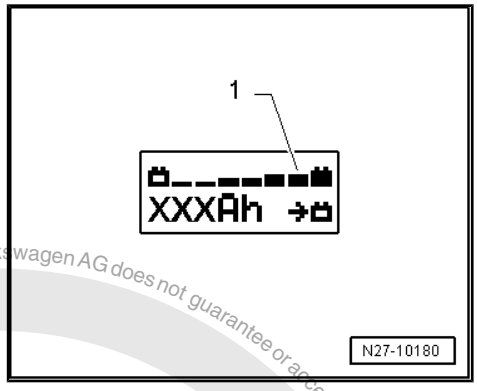

Note

- *In the case of battery type "standard charge", the parallel operation of electrical consumers while charging is possible. The charging period will be longer.*
- *The battery charger will switch to trickle charge mode after about 1-7 hours, depending on type of battery. To achieve a 100% charge the battery should remain connected for this period.*

Possible faults and fault rectification:

1 - Displayed battery voltage is not as per nominal voltage:

– Press and hold respective button ("Up" ↑ or "Down" ↓) until charging process starts.

2 - Displayed battery voltage is not as per nominal voltage – charging process has already started:

– Press START / STOP twice.

– Press and hold respective button ("Up" ↑ or "Down" ↓) until charging process starts again.

3 - Battery charger does not detect a battery when battery voltage is less than 2 V:

Display remains unchanged.

The battery type and ampere hours (Ah) as set is displayed.

Ending battery charging sequence:

– Press START / STOP.

– Disconnect black terminal clamp "-" of charger from negative terminal.

– Disconnect red terminal clamp "+" of charger from positive terminal on battery.

– Pull charger plug out of battery charger.

3.4.3 Charging battery in refresh charge mode with battery charger - VAS 5903-

WARNING

Danger of injury! Observe warning notices and safety regulations ⇒ page 3 !

WARNING

It is not permissible to test or charge batteries whose magic eye shows light yellow. Do not slave/jump start the vehicle!

Danger of explosion when checking and charging or slave/jump starting.

These batteries must be renewed.

Protected by copyright. Copying for private or commercial purposes, in part or in whole, is not permitted unless authorised by Volkswagen AG. Volkswagen AG does not guarantee or accept any liability with respect to the correctness of information in this document. Copyright by Volkswagen AG.
satelettronica

Caution

The operating mode "refresh charge" is not permitted on VW vehicles as the voltage peaks will damage the on-board electronics.

If you nevertheless use "refresh charge" mode the battery must be disconnected from the on-board supply.

Caution

When charging always set the battery charger to the correct type of battery ⇒ operating instructions for battery charger - VAS 5903- !

The "refresh charge" mode is suitable for:

- *Wet batteries, where distilled water can be replenished.*

Do not use operating mode "refresh charge" with maintenance-free wet batteries.

The "refresh charge (refr)" operating mode is only used on suspect defective batteries (e.g. sulphation). The battery will be charged to maximum specific gravity and the plates will be reactivated (dissipation of sulphur layer).

Special tools and workshop equipment required

- Battery charger - VAS 5900-

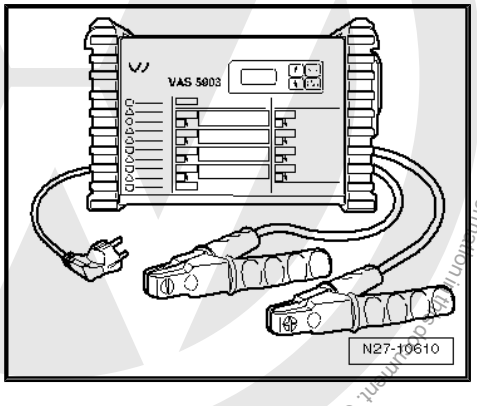

Note

The battery must have a temperature of at least 10 °C.

– Switch off ignition and all electrical consumers.

– Connect charger plug to battery charger. The last selected operating mode will appear on display ⇒ page 48 .

Protected by copyright. Copying for private or commercial purposes, in part or in whole, is not permitted unless authorised by Volkswagen AG. Volkswagen AG does not guarantee or accept any liability with respect to the correctness of information in this document. Copyright by Volkswagen AG.
satelettronica

– Set battery to respective operating mode with INFO.

In the display the symbol -1- for “refresh charge for wet batteries” or symbol -2- for “refresh charge for gel/absorbent glass mat batteries” will appear.

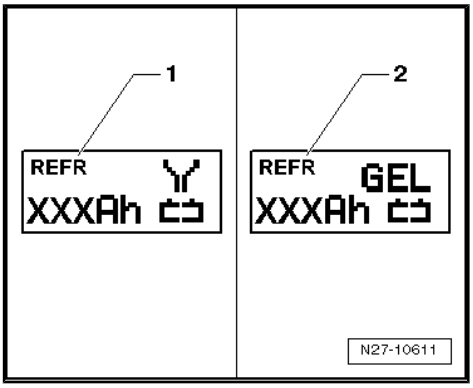

– Set battery capacity (Ah) of battery to be charged using respective button (“Up” ↑ or “Down” ↓).

– Connect red terminal clamp “+” to positive terminal on battery.

Note

In vehicles with start/stop function and battery monitor control unit - J367- fitted, black terminal clamp “–” must be connected to body earth. Connecting it to battery negative terminal will cause start/stop system to malfunction.

– Connect black terminal clamp “-” to negative terminal.

The charger unit recognises the voltage required for the connected battery (6 V, 12 V or 24 V) and initiates the charging sequence automatically.

At a charge condition of approx. 80 - 85 % of the battery voltage, the battery charger switches to the “final charge” mode. The fourth bar appears in display -1-. The battery is ready for use.

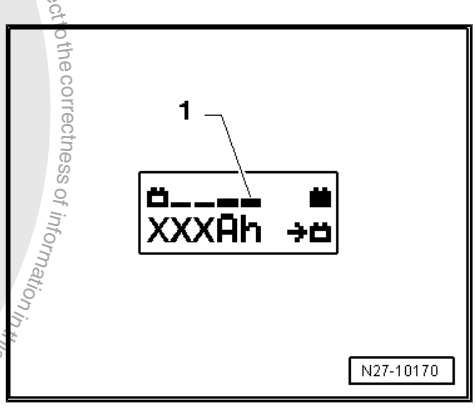

Note

The success of the “refresh charge” depends on the severity of the sulphation of the battery.

Possible faults and fault rectification:

1 - Displayed battery voltage is not as per nominal voltage:

– Press and hold respective button (“Up” ↑ or “Down” ↓) until charging process starts.

2 - Displayed battery voltage is not as per nominal voltage – charging process has already started:

– Press START / STOP twice.

– Press and hold respective button (“Up” ↑ or “Down” ↓) until charging process starts.

3 - Battery charger does not detect a battery when battery voltage is less than 2 V:

Display remains unchanged.

The operating mode and ampere hours (Ah) as set are displayed.

Ending battery charging sequence:

– Press START / STOP.

– Disconnect black terminal clamp “-” of charger from negative terminal.

– Disconnect red terminal clamp “+” of charger from positive terminal on battery.

– Pull charger plug out of battery charger.

Protected by Volkswagen AG. Volkswagen AG does not guarantee or accept any liability with respect to the correctness of information in this document. Copyright by Volkswagen AG.
Protected by copyright. Copying for private or commercial purposes, in part or in whole, is not permitted unless authorised by Volkswagen AG.
satelettronica

3.4.4 Charging totally discharged battery with battery charger - VAS 5903-

Note

- *A charger with a charge current of at least 70A is required if the software is updated or flashed in a vehicle to prevent problems during updating and flashing.*
- *"VAS 5903"* ⇒ *"3.4 Battery charger VAS 5903 ", page 48*
- *"VAS 5908"* ⇒ *"3.6 Battery charger VAS 5908 ", page 63*

WARNING

Danger of injury! Observe warning notices and safety regulations ⇒ *page 3* *!*

WARNING

It is not permissible to test or charge batteries whose magic eye shows light yellow. Do not slave/jump start the vehicle!

Danger of explosion when checking and charging or slave/jump starting.

These batteries must be renewed.

Caution

- *The terminal polarity protection in operating mode "charging totally discharged batteries/support mode" is not active. Connect battery charger terminal clamps correctly to battery terminals.*
- *When charging always set the battery charger to the correct type of battery ⇒ operating instructions for battery charger - VAS 5903- !*
- *Totally discharged batteries are not recognised by the battery charger* ⇒ *page 77* *.*
- *Do not press* START / STOP *button when charger unit cables are connected incorrectly. The charger unit may be damaged.*

Batteries with a voltage of less than 2 volts will not be recognised automatically by battery charger - VAS 5903- .

Special tools and workshop equipment required

Protected by copyright. Copying for private or commercial purposes, in part or in whole, is not permitted unless authorised by Volkswagen AG. Volkswagen AG does not guarantee or accept any liability with respect to the correctness of information in this document. Copyright by Volkswagen AG.
satelettronica

- Battery charger - VAS 5903-

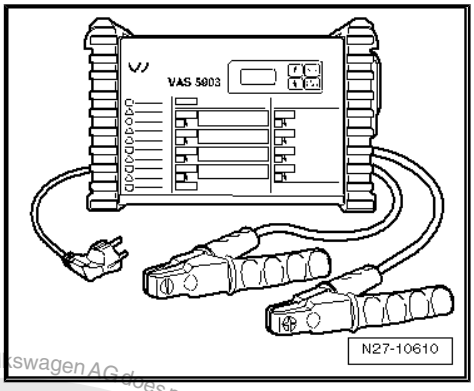

Note

- *Observe notes in chapter ⇒ page 77.*
- *Totally discharged batteries in unregistered vehicles must be exchanged prior to delivery. Preliminary damage cannot be excluded.*
- *The battery must have a temperature of at least 10 °C.*

– Switch off ignition and all electrical consumers.

– Connect charger plug to battery charger. The last selected operating mode will appear on display ⇒ page 48 .

Protected by copyright. Copying for private or commercial purposes, in part or in whole, is not permitted unless authorised by Volkswagen AG. Volkswagen AG does not guarantee or accept any liability with respect to the correctness of information in this document. Copyright by Volkswagen AG.
satelettronica

– Set battery to respective operating mode with INFO.

In the display, the symbol -1- for “Service charge for wet batteries” or symbol -2- for “Service charge for gel/absorbent glass mat batteries” will appear.

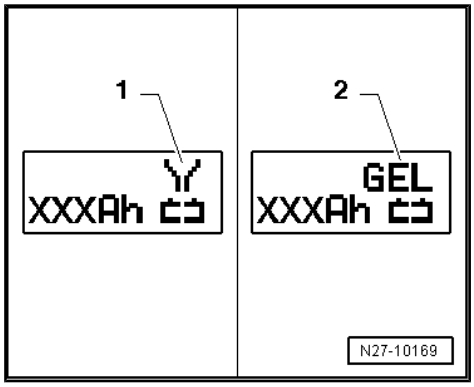

– Set battery capacity (Ah) of battery to be charged using respective button (“Up” ↑ or “Down” ↓).

– Connect red terminal clamp “+” to positive terminal on battery.

Note

In vehicles with start/stop function and battery monitor control unit - J367- fitted, black terminal clamp “–” must be connected to body earth. Connecting it to battery negative terminal will cause start/stop system to malfunction.

– Connect black terminal clamp “-” to negative terminal.

– Press START / STOP for approx. 5 seconds. The menu “charging totally discharged batteries/support mode” will be activated.

– Press respective button (“Up” ↑ or “Down” ↓) to set required battery voltage (6 V, 12 V or 24 V).

Note

If a button is not pressed within 5 seconds the charger will return to the main menu (select operating mode).

– Confirm the selected battery voltage with START / STOP.

Then follows the enquiry for "is charger cable terminal polarity correct".

– Check polarity of charger unit cables.

– Confirm polarity of charger unit cables with START / STOP.

Charger will start charging sequence for totally discharged battery.

Ending battery charging sequence:

– Press START / STOP.

– Disconnect black terminal clamp “-” of charger from negative terminal.

– Disconnect red terminal clamp “+” of charger from positive terminal on battery.

– Pull charger plug out of battery charger.

Protected by copyright. Copying for private or commercial purposes, in part or in whole, is not permitted unless authorised by Volkswagen AG. Volkswagen AG does not guarantee or accept any liability with respect to the correctness of information in this document. Copyright by Volkswagen AG.
satelettronica

3.4.5 Charging battery in support mode with battery charger - VAS 5903-

Note

- *A charger with a charge current of at least 70A is required if the software is updated or flashed in a vehicle to prevent problems during updating and flashing.*
- *"VAS 5903"* ⇒ *"3.4 Battery charger VAS 5903 ", page 48*
- *"VAS 5908"* ⇒ *"3.6 Battery charger VAS 5908 ", page 63*

General notes:

The support mode provides the on-board supply with power when the battery is removed or disconnected.

For further information, refer to the ⇒ operating manual VAS 5903 .

The support mode is suitable in the following situations:

- Support mode of on-board supplies without installed battery
- Power conservation when renewing the battery
- Ancillaries test without battery

WARNING

Danger of injury! Observe warning notices and safety regulations ⇒ *page 3* *!*

WARNING

It is not permissible to test or charge batteries whose magic eye shows light yellow. Do not slave/jump start the vehicle!

Danger of explosion when checking and charging or slave/jump starting.

These batteries must be renewed.

– Switch off ignition and all electrical consumers.

Caution

- *The terminal polarity protection in operating mode "charging totally discharged batteries/support mode" is not active. Connect battery charger terminal clamps correctly to battery terminals.*
- *It can cause sparks through a short-circuit.*
- *Danger of explosion*
- *Ensure charger terminal clamps are seated securely.*
- *Do not press* START / STOP *button when charger unit cables are connected incorrectly. The charger unit may be damaged.*

– Remove battery.

Copyright by Volkswagen AG. Volkswagen AG does not guarantee or accept any liability with respect to the correctness of information in this document. Copying for private or commercial purposes, in part or in whole, is not permitted unless authorised by Volkswagen AG.
satelettronica

– Connect charger plug to battery charger. The last selected operating mode will appear on display ⇒ page 29 .

Caution

When battery is removed, ensure there is no contact between terminal clamp connected to positive clamp of battery and body earth. Also ensure there is no contact between battery clamps.

– Connect red terminal clamp “+” to positive terminal of vehicle.

Note

In vehicles with start/stop function and battery monitor control unit - J367- fitted, black terminal clamp “–” must be connected to body earth. Connecting it to battery negative terminal will cause start/stop system to malfunction.

– Connect black terminal clamp “-” to negative terminal of vehicle.

– Press START / STOP for approx. 5 seconds. The menu “charging totally discharged batteries/support mode” will be activated.

– Press respective button (“Up” ↑ or “Down” ↓) to set required battery voltage (6 V, 12 V or 24 V).

Note

If a button is not pressed within 5 seconds the charger will return to the main menu (select operating mode).

– Confirm the selected battery voltage with START / STOP.

Then follows the enquiry for "is charger cable terminal polarity correct".

– Check polarity of charger unit cables.

– Confirm polarity of charger unit cables with START / STOP.

The battery charger starts with support mode.

End battery support mode:

– Press START / STOP.

– Disconnect black terminal clamp “–” of charger unit from negative terminal of vehicle.

– Disconnect red terminal clamp “+” of charger unit from positive terminal of vehicle.

– Pull charger plug out of battery charger.

Protected by copyright. Copying for private or commercial purposes, in part or in whole, is not permitted unless authorised by Volkswagen AG. Volkswagen AG does not guarantee or accept any liability with respect to the correctness of information in this document. Copyright by Volkswagen AG.
satelettronica

3.4.6 Charging battery in trickle charge mode with battery charger - VAS 5903-

Note

- *A charger with a charge current of at least 70A is required if the software is updated or flashed in a vehicle to prevent problems during updating and flashing.*
- *"VAS 5903"* ⇒ *"3.4 Battery charger VAS 5903 ", page 48*
- *"VAS 5908"* ⇒ *"3.6 Battery charger VAS 5908 ", page 63*

Note

- *When a battery is being charged in the trickle charge mode and an electrical consumer draws current from the battery, the battery charger - VAS 5903- automatically compensates the charge.*
- *The trickle charge can be continued for an unlimited period.*
- *The battery is always ready for use.*
- *Observe battery manufactures maintenance instructions!*

WARNING

Danger of injury! Observe warning notices and safety regulations ⇒ page 3 !

WARNING

It is not permissible to test or charge batteries whose magic eye shows light yellow. Do not slave/jump start the vehicle!

Danger of explosion when checking and charging or slave/jump starting.

These batteries must be renewed.

When the battery is fully charged the battery charger - VAS 5903- switches to trickle charge mode.

– Proceed as for charging battery ⇒ page 49 .

At a charge level of 100 % all bars appear on the display.

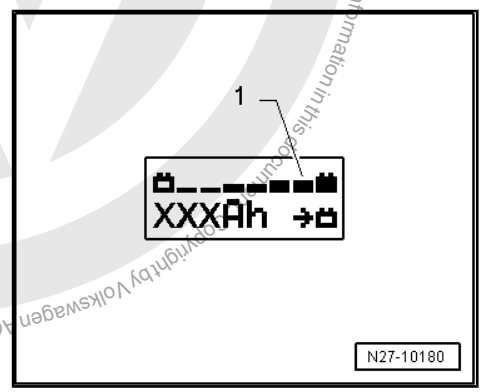

Protected by copyright. Copying for private or commercial purposes, in part or in whole, is not permitted unless authorised by Volkswagen AG. Volkswagen AG does not guarantee or accept any liability with respect to the correctness of information in this document. Copyright by Volkswagen AG.
satelettronica

3.5 Battery charger - VAS 5906-

3.5.1 General description

Battery charger - VAS 5906-

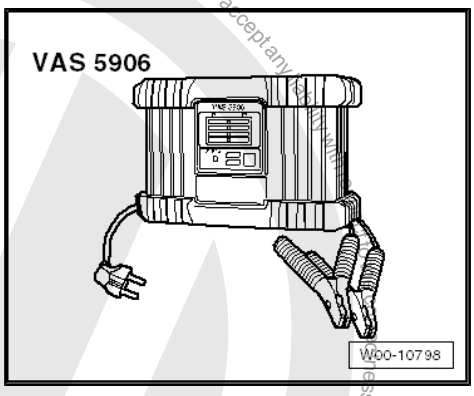

Note

- *A charger with a charge current of at least 70A is required if the software is updated or flashed in a vehicle to prevent problems during updating and flashing.*
- *"VAS 5903"* ⇒ *"3.4 Battery charger VAS 5903 ", page 48*
- *"VAS 5908"* ⇒ *"3.6 Battery charger VAS 5908 ", page 63*

WARNING

Danger of injury! Observe warning notices and safety regulations ⇒ page 3 !

WARNING

It is not permissible to test or charge batteries whose magic eye shows light yellow. Do not slave/jump start the vehicle!

Danger of explosion when checking and charging or slave/jump starting.

These batteries must be renewed.

Charge current of charger: 30 A.

Battery charger - VAS 5906- has been specially developed for charging in vehicle on-board supply during vehicle presentation.

It has an automatic charging characteristic for starter batteries, 3 - 300 AH.

The maximum charging voltage 14.4 V is not exceeded. All electrical loads are supported by up to 30 A by the trickle charging.

For sustained operation, battery charger - VAS 5906- changes to trickle charging once battery is fully charged.

Tester starts fully automatically and does not require any settings. All that is required is to connect crocodile clips and mains cable.

For further information, refer to the ⇒ operating manual VAS 5906 .

Volkswagen AG. Volkswagen AG does not guarantee or accept any liability with respect to the correctness of information in this document. Copyright by Volkswagen AG.
Protected by copyright. Copying for private or commercial purposes, in part or in whole, is not permitted unless authorised by Volkswagen AG.
satelettronica

3.5.2 Charging battery with battery charger - VAS 5906-

Note

- *A charger with a charge current of at least 70A is required if the software is updated or flashed in a vehicle to prevent problems during updating and flashing.*
- *"VAS 5903"* *⇒ "3.4 Battery charger VAS 5903 ", page 48*
- *"VAS 5908"* *⇒ "3.6 Battery charger VAS 5908 ", page 63*

WARNING

Danger of injury! Observe warning notices and safety regulations ⇒ page 3 !

WARNING

It is not permissible to test or charge batteries whose magic eye shows light yellow. Do not slave/jump start the vehicle!

Danger of explosion when checking and charging or slave/jump starting.

These batteries must be renewed.

Protected by copyright. Copying for private or commercial purposes, in part or in whole, is not permitted unless authorised by Volkswagen AG. Volkswagen AG does not guarantee or accept any liability with respect to the correctness of information in this document. Copyright by Volkswagen AG.
satelettronica

Overview of operating panel:

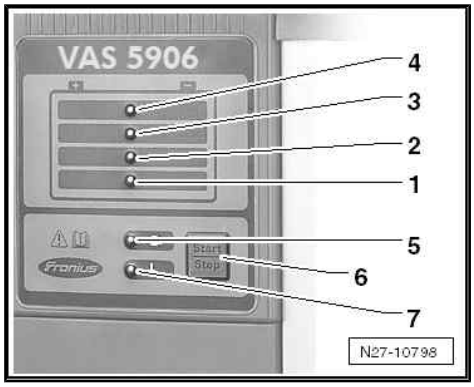

1 - Charge condition display 25 %.

2 - Charge condition display 50 %.

3 - Charge condition display 75 %.

4 - Charge condition display 100 %.

5 - Display ready

6 - Start/Stop and Setup buttons for interrupting and resuming charging process. Entry to Letup menu and selection of characteristic type (press for 10 sec.).

7 - Malfunction display.

– Place charger in engine compartment or under vehicle.

– Connect mains cable to charger and plug it into mains.

Charger is in no-load operation - ready light is on.

WARNING

Danger of injury! Observe warning notices and safety regulations ⇒ page 3 !

– Switch off ignition.

– Connect red charging cable to positive terminal “+” on battery.

Note

In vehicles with start/stop function and battery monitor control unit - J367- fitted, black terminal clamp “–” must be connected to body earth. Connecting it to battery negative terminal will cause start/stop system to malfunction.

– Connect black charging cable to negative terminal “-” on battery.

Charging starts after about 2 seconds.

Number of LEDs lit indicates charge condition of battery. Battery has been charged up once all lights are lit.

When battery is fully charged, battery charger - VAS 5906- automatically switches over to trickle charging.

Caution

Danger of sparking if charging terminals are removed too soon. Terminate charging by pressing START/STOP button.

– Press start/stop button to terminate charging.

– Disconnect black charging cable from negative terminal “-” on battery.

– Disconnect red charging cable from positive terminal “+” on battery.

satelettronica
Protected by copyright. Copying for private or commercial purposes, in part or in whole, is not permitted unless authorised by Volkswagen AG. Volkswagen AG does not guarantee or accept any liability with respect to the correctness of information in this document. Copyright by Volkswagen AG.

3.6 Battery charger - VAS 5908-

⇒ "3.6.1 General description - battery charger VAS 5908 ", page 63

⇒ "3.6.2 Auto mode on battery charger VAS 5908 ", page 64

⇒ "3.6.3 Charging battery with battery charger VAS 5908 ", page 66

⇒ "3.6.4 Charging battery in support mode with battery charger VAS 5908 ", page 68

⇒ "3.6.5 VAS I-CHECK current draw test with battery charger VAS 5908 ", page 70

3.6.1 General description - battery charger - VAS 5908-

Note

- *A charger with a charge current of at least 70A is required if the software is updated or flashed in a vehicle to prevent problems during updating and flashing.*
- *"VAS 5903"* *⇒ "3.4 Battery charger VAS 5903 ", page 48*
- *"VAS 5908"* *⇒ "3.6 Battery charger VAS 5908 ", page 63*

Battery charger - VAS 5908- has the following operating modes:

- AUTO MODE, trickle charge with automatic load detection (battery or electrical consumer) ⇒ page 64
- CHARGE MODE, battery charging with adjustable parameters ⇒ page 66
- EPS MODE, external power supply (support mode) ⇒ page 68
- I-CHECK, current draw test with short circuit test between cells ⇒ page 70

Technical data

- Input voltage: 100-240 VAC
- Output voltage: 14.4 VDC (13.2 VDC with trickle charge)
- Charge current: 90 A (max. 105 A)
- Weight: 8.2 kg

Replacement parts

- Charger cable 5m - VAS 5908/1-
- Charger coupling - VAS 5908/2-

For additional information, refer to ⇒ Operating instructions for battery charger - VAS 5908- .

Protected by copyright. Copying for private or commercial purposes, in part or whole, is not permitted unless authorised by Volkswagen AG. Volkswagen AG does not guarantee or accept any liability with respect to the correctness of information in this document. Copyright by Volkswagen AG.
satelettronica

Equipment overview of battery charger - VAS 5908-

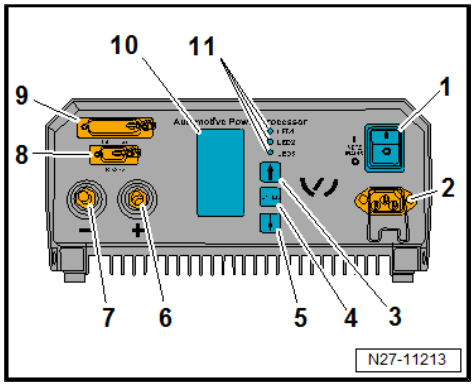

1 - “ON/OFF” mains switch

2 - Mains cable connection

3 - UP ▲ button for menu selection

4 - ENTER button for menu selection or start

5 - DOWN ▼ button for menu selection

6 - Battery charger clamp connection + (red clamp)

7 - Battery charger clamp connection - (black clamp)

8 - RS232 communication interface, 9-pin

9 - Signal interface, 25-pin

10 - Display for menu selection

11 - LED display for displaying operating and equipment status

LED display -11-

The LED display on the front of the equipment serves to indicate the operating and equipment statuses. The relevance of the flashing or lit green, amber or red LEDs in the various operating statuses is listed in a table ⇒ Operating instructions battery charger - VAS 5908- , 8) Attachment for LED and remote indicator signals .

Equipment menu

In the equipment menu, various parameters and basic settings can be predefined to safeguard measured values and determine the activation and deactivation behaviour of the battery charger - VAS 5908- .

– Switch on battery charger - VAS 5908- .

– Using buttons ▲▼, choose menu line »MENU« and confirm with ENTER button.

– Using buttons ▲▼, choose sub-menu »EQUIPMENT MENU« and confirm with ENTER button.

For further information about the equipment menu, see ⇒ Operating instructions for battery charger - VAS 5908- .

3.6.2 Auto mode on battery charger - VAS 5908-

Note

- *A charger with a charge current of at least 70A is required if the software is updated or flashed in a vehicle to prevent problems during updating and flashing.*
- *“VAS 5903” ⇒ “3.4 Battery charger VAS 5903 ”, page 48*
- *“VAS 5908” ⇒ “3.6 Battery charger VAS 5908 ”, page 63*

»AUTO MODE« serves to maintain the voltage in the vehicle electrical system (trickle charge) during flashing or diagnostic work. In »AUTO MODE«, the battery charger - VAS 5908- automatically detects whether a battery or an electrical consumer with resistive load is connected by means of integrated load detection.

Special tools and workshop equipment required

satelettronica

- Battery charger - VAS 5908-

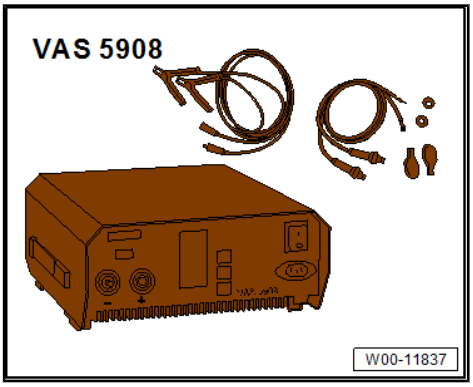

Starting supply process

Note

If the charger clamps are connected to an electrical consumer or battery before the charger is switched on, the battery charger - VAS 5908- starts trickling charging in »AUTO MODE« automatically once it is switched on.

– Switch on battery charger - VAS 5908- .

– Using buttons [▲▼], choose [AUTO MODE] and confirm with [ENTER] button.

– Connect red terminal clamp “+” to positive terminal of vehicle battery.

Note

- *On vehicles installed with a start/stop system and battery monitor control unit - J367- , the black charger terminal clamp “-” must be connected to the body earth.*
- *If it is connected to the negative terminal of the battery, the battery monitor control unit - J367- will be bridged. This could result in malfunctions in the start/stop system.*

– On vehicles with start/stop system, fit the black charger clamp “-” to body earth.

– On vehicles without start/stop system, fit the black charger clamp “-” to the negative terminal of the vehicle battery.

OR

– Fit the charger clamps with correct polarity to an electric consumer with resistive load.

– Using buttons [▲▼], choose menu [START] and confirm with [ENTER] button to start the supply.

Note

The battery charger - VAS 5908- adapts the current and voltage thresholds automatically for auto mode.

Ending supply process

– Using buttons [▲▼], choose menu [STOP] and confirm with [ENTER] button to stop the supply.

Protected by copyright. Copying for private or commercial purposes, in part or in whole, is not permitted unless authorised by Volkswagen AG. Volkswagen AG does not guarantee or accept any liability with respect to the correctness of information in this document. Copyright by Volkswagen AG.
satelettronica

Volkswagen AG. Volkswagen AG does not guarantee or accept any liability with respect to the correctness of information in this document. Copyright by Volkswagen AG. Protected by copyright. Copying for private or commercial purposes, in part or in whole, is not permitted unless authorised by Volkswagen AG.

– Switch off battery charger - VAS 5908-
– Disconnect black charger clamp "-" of battery charger from negative terminal of vehicle battery or electrical consumer.
– Disconnect red charger clamp "+" of battery charger from positive terminal of vehicle battery or electrical consumer.
– Pull out mains plug of charger.

3.6.3 Charging battery with battery charger - VAS 5908-

Note

- *A charger with a charge current of at least 70A is required if the software is updated or flashed in a vehicle to prevent problems during updating and flashing.*
- *"VAS 5903"* *⇒ "3.4 Battery charger VAS 5903 ", page 48*
- *"VAS 5908"* *⇒ "3.6 Battery charger VAS 5908 ", page 63*

WARNING

Danger of injury! Observe warning instructions and safety regulations ***⇒ page 3*** ***.***

WARNING

Do not test or charge batteries - A- whose magic eye is »colourless/light yellow«. Do not slave/jump start the vehicle!

Danger of explosion when checking and charging or slave/jump starting.

These batteries must be renewed.

Note

- *Follow instructions in chapter »Exhaustively discharged batteries«* *⇒ page 77* *.*
- *Totally discharged batteries in unregistered vehicles must be exchanged prior to delivery. Preliminary damage cannot be excluded.*
- *The battery must have a temperature of at least 10 °C.*
- *The minimum voltage "Uesp" of the battery to be charged must be at least 5 V.*

Special tools and workshop equipment required

satelettronica

Volkswagen AG. Volkswagen AG does not guarantee or accept any liability with respect to the correctness of information in this document. Copyright by Volkswagen AG. Protected by copyright. Copying for private or commercial purposes, in part or in whole, is not permitted unless authorised by Volkswagen AG.

- Battery charger - VAS 5908-

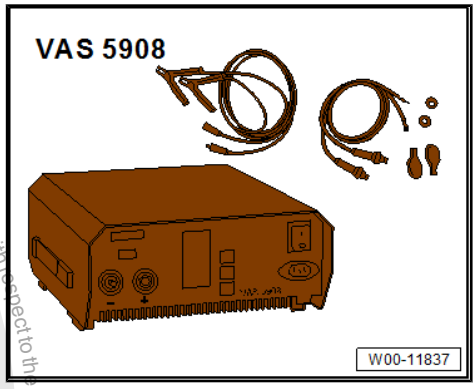

Charging battery

– Switch off ignition and all electrical equipment and then remove ignition key.

– Switch on battery charger - VAS 5908- .

– Connect red terminal clamp “+” to positive terminal of vehicle battery.

Note

- *On vehicles installed with a start/stop system and battery monitor control unit - J367- , the black charger terminal clamp “-” must be connected to the body earth.*
- *If it is connected to the negative terminal of the battery, the battery monitor control unit - J367- will be bridged. This could result in malfunctions in the start/stop system.*

– On vehicles with start/stop system, fit the black charger clamp “-” to body earth.

– On vehicles without start/stop system, fit the black charger clamp “-” to the negative terminal of the vehicle battery.

– Using buttons [▲▼], choose [CHARGE MODE] and confirm with [ENTER] button.

Note

- *The battery charger - VAS 5908- adapts the current and voltage thresholds automatically for charge mode.*
- *Predefine different current and voltage thresholds in the charging menu if necessary* ⇒ page 68 .

Ending battery charging process

– Switch off battery charger - VAS 5908- .

– Disconnect black charger clamp “-” of battery charger from negative terminal of vehicle battery.

– Disconnect red charger clamp “+” of battery charger from positive terminal of vehicle battery.

– Pull out mains plug of charger.

satelettronica

Note

For sustained operation, the battery charger - VAS 5908- automatically changes to trickle charging once the battery is fully charged.

Charging menu

The battery charger adapts the current and voltage thresholds automatically for charge mode. The parameters for charging mode can also be set manually.

– Using buttons [▲▼], choose menu line »MENU« and confirm with [ENTER] button.

– Using buttons [▲▼], choose sub-menu »CHARGING MENU« and confirm with [ENTER] button.

For further information about the charging menu, see ⇒ Operating instructions for battery charger - VAS 5908- .

3.6.4 Charging battery in support mode with battery charger - VAS 5908-

Note

- *A charger with a charge current of at least 70A is required if the software is updated or flashed in a vehicle to prevent problems during updating and flashing.*
- *"VAS 5903"* *⇒ "3.4 Battery charger VAS 5903 ", page 48*
- *"VAS 5908"* *⇒ "3.6 Battery charger VAS 5908 ", page 63*

Support or backup mode (»EPS MODE«) serves to supply the vehicle electrical system with power if the battery is disconnected or removed.

The support mode is suitable in the following situations:

- Support mode of on-board supplies without installed battery
- Power conservation when renewing the battery
- Ancillaries test without battery

Caution

In »EPS MODE«, only a resistive load (electrical consumer) may be supplied.

»EPS MODE« may not be used if a battery is connected.

Before using »EPS MODE«, disconnect or remove the battery.

Special tools and workshop equipment required

Protected by copyright. Copyright by Volkswagen AG. Volkswagen AG does not guarantee or accept any liability with respect to the correctness of information in this document. Copyright by Volkswagen AG.
satelettronica

- Battery charger - VAS 5908-

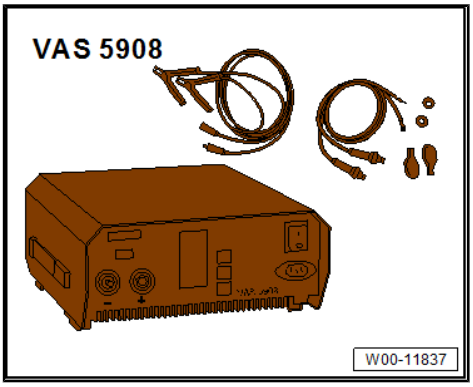

Performing support mode

– Switch off ignition and all electrical equipment and then remove ignition key.

– Remove battery ⇒ Electrical system; Rep. gr. 27 ; Removing and installing battery .

– Switch on battery charger - VAS 5908- .

> **Caution**
>
> *Make absolutely sure that the red charger clamp does not come into contact with the body earth.*
>
> *Make absolutely sure that the battery terminal clamps do not come into contact with each other.*

– Connect red terminal clamp “+” of charger to positive terminal clamp of vehicle battery.

Note

- *On vehicles installed with a start/stop system and battery monitor control unit - J367- , the black charger terminal clamp “-” must be connected to the body earth.*
- *If it is connected to the negative terminal of the battery, the battery monitor control unit - J367- will be bridged. This could result in malfunctions in the start/stop system.*

– On vehicles with start/stop system, fit the black charger clamp “-” to body earth.

– On vehicles without start/stop system, fit the black charger clamp “-” to the negative terminal clamp of the vehicle battery.

Note

- *The battery charger - VAS 5908- adapts the current and voltage thresholds automatically for support mode.*
- *Predefine different current and voltage thresholds in the EPS menu if necessary* *⇒ page 70* .

– Using buttons [▲▼], choose [EPS MODE] and confirm with [ENTER] button.

Ending backup power supply

– Switch off battery charger - VAS 5908- .

Protected by copyright. Copying for private or commercial purposes, in part or in whole, is not permitted unless authorised by Volkswagen AG. Volkswagen AG does not guarantee or accept any liability with respect to the correctness of information in this document. Copyright by Volkswagen AG.

satelettronica

– Disconnect black charger clamp “-” of battery charger from negative terminal clamp of vehicle battery.

– Disconnect red charger clamp “+” of battery charger from positive terminal clamp of vehicle battery.

– Pull out mains plug of charger.

EPS menu

The battery charger adapts the current and voltage thresholds automatically for support mode. The parameters for support mode can also be set manually.

– Using buttons ▲▼, choose menu line »MENU« and confirm with ENTER button.

– Using buttons ▲▼, choose sub-menu »EPS MENU« and confirm with ENTER button.

For further information about the EPS menu, see ⇒ Operating instructions for battery charger - VAS 5908- .

3.6.5 VAS I-CHECK current draw test with battery charger - VAS 5908-

Note

- *A charger with a charge current of at least 70A is required if the software is updated or flashed in a vehicle to prevent problems during updating and flashing.*
- *“VAS 5903”* *⇒ “3.4 Battery charger VAS 5903 ”, page 48*
- *“VAS 5908”* *⇒ “3.6 Battery charger VAS 5908 ”, page 63*

The current draw test serves as a means of quickly appraising the condition of a discharged battery. Based on the result of the current draw test, it is possible to determine whether the battery must be renewed or fully charged.

Note

For the battery current draw test, take measures to ensure that the battery is testing without electrical consumers attached in parallel.

Special tools and workshop equipment required

- Battery charger - VAS 5908-

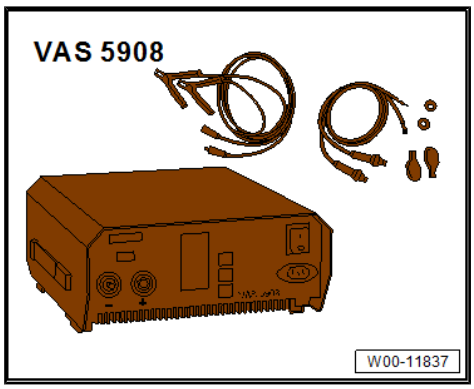

Perform current draw test

– Disconnect both battery terminal clamps so as not to falsify the result from electrical consumers within the vehicle ⇒ Electrical

Protected by copyright. Copying for private or commercial purposes, in part or in whole, is not permitted unless authorised by Volkswagen AG. Volkswagen AG does not guarantee or accept any liability with respect to the correctness of information in this document. Copyright by Volkswagen AG.

satelettronica

system; Rep. gr. 27 ; Battery; Disconnecting and connecting battery .

– Switch on battery charger - VAS 5908- and connect to battery with correct polarity using charger clamps.

– Using buttons [▲▼], choose menu line »AUTO MODE« and confirm with [ENTER] button (display flashes).

– Using buttons [▲▼], choose [I-CHECK] and confirm with [ENTER] button.

– Activate battery capacity input »Qbat:« by pressing [ENTER] button (flashes).

– Using buttons [▲▼], set capacity (Ah) of battery to be tested and confirm with [ENTER] button.

– Using buttons [▲▼], choose menu line »TEST START« and confirm with [ENTER] button to start the current draw test. Note possible connection error messages ⇒ page 72 .

While current draw test is running, »TEST« flashes in display. Button lock is activated, active test can only be interrupted by removing charger clamps. Note possible abort error messages ⇒ page 72 .

End of test with result 'Current draw I less than 100 %' (battery defective)

If the current draw »I« is <100 % at the end of the test, the current supply to the battery is interrupted and »FILL IN WARRANTY APPLICATION« appears in the display.

– Using buttons [▲▼], choose »OK« and confirm with [ENTER] button to display the test results.

The current draw percentage is displayed in the results windows under »I«. The displayed data can be copied over to the battery test sheet.

– Using buttons [▲▼], choose »TEST END« and confirm with [ENTER] button to stop the current draw test.

End of test with result 'Current draw I greater than 100 %' (battery in order but insufficiently charged)

If the current draw »I« is >100 % at the end of the test, the current supply to charge the battery is continued.

– Using buttons [▲▼], choose »RESULT« and confirm with [ENTER] button to display the test results.

The current draw percentage is displayed in the results windows under »I«.

– Using buttons [▲▼], choose »OK« or »TEST END« and confirm with [ENTER] button to change to “I-Check charge mode” and continue charging the battery.

In I-Check charging mode, »CHARGING« flashes in the display until the battery is fully charged. Once the charging process is complete, the equipment switches automatically to trickle charge. »TRICKLE« flashes in the display.

Copyright. Copyright. Protected by Volkswagen AG. Volkswagen AG does not guarantee or accept any liability with respect to the correctness of information in this document. Copyright by Volkswagen AG. Private use only. Commercial purposes, in part or in whole, is not permitted unless authorised by Volkswagen AG.
satelettronica

Note

- *While the battery is being charged in "I-Check charging mode", the short circuit between cells test is automatically active.*
- *When the short circuit between cells test is active, the battery charge is interrupted twice for approx. 30 seconds in order to perform a voltage measurement.*
- *If the short circuit between cells test is positive, the charging process is interrupted and »CELL SHORT CIRCUIT« is displayed.*

Connection error messages

- »APPLICATION ERROR - CONTACT« = no battery detected and no battery connected.
- »APPLICATION ERROR - POLARITY REVERSAL« = battery was connected with polarity reversal.
- »APPLICATION ERROR - EXHAUSTIVE DISCHARGE« = voltage level of connected battery is below the activation voltage limit (Uesp) as defined in the charging menu.

Abort error messages

- »APPLICATION ABORT - CONTACT« = battery was disconnected during the test.
- »APPLICATION ABORT - SHORT CIRCUIT« = short circuit determined in battery cables.

3.7 Midtronics - INC 940- battery charger only for USA/Canada

Warning and safety regulations ⇒ page 3

General description ⇒ page 72

Charge battery ⇒ page 73 .

Dealing with problems with Midtronics - INC 940- battery tester ⇒ page 75

3.7.1 General description of Midtronics - INC 940- battery tester

Batteries in VW vehicles are only allowed to be charged with battery chargers approved by VW. In the USA/Canada, it is permitted for the Midtronics - INC 940- battery charger to be used.

Midtronics - INC 940- battery charger combines battery charging with a charge condition checks and a battery test.

The following charging and analysis procedures apply to all batteries, all battery installation locations (engine compartment or luggage compartment) and battery application purposes (starter battery or second/convenience battery).

Always comply with the safety regulations, the regulations for setting up the battery charger, the display menu/display buttons, LEDs and the operating procedures described in the ⇒ operating manual INC 940 .

Read through ⇒ operating manual INC 940 carefully.

Refer to ⇒ Self-study programme No. ; Vehicle batteries for more information.

satelettronica

WARNING

Danger of injury! Observe warning notices and safety regulations ⇒ page 3 !

No naked flames, sparking or smoking in the vicinity of batteries.

Battery charger must be switched off before cables are connected or disconnected.

Do not remove cell plugs during charging.

Overcharging sulphated batteries can lead to explosions.

Do not store precision tools in rooms where batteries are charged, because corrosion can ensue due to chemical reactions.

WARNING

It is not permissible to test or charge batteries whose magic eye shows light yellow. Do not slave/jump start the vehicle!

Danger of explosion when checking and charging or slave/jump starting.

These batteries must be renewed.

3.7.2 Charging battery

Note

To avoid problems when updating or flashing the vehicle software, a charger capable of outputting a charge current of at least 70 A (such as e.g. the "VAS 5903") should be used. ⇒ page 48

Prerequisites:

WARNING

It is not permissible to test or charge batteries whose magic eye shows light yellow. Do not slave/jump start the vehicle!

Danger of explosion when checking and charging or slave/jump starting.

These batteries must be renewed.

INC 940 initial set-up performed (dealership number, date/time)
⇒ Operating manual INC 940 .

– Check general information ⇒ page 72 .
– Open bonnet or cover for other installation location of battery.
– Perform visual check of battery ⇒ page 7 .
– Determine whether battery type is "Standard" (wet battery) or "AGM" (absorbent glass mat battery).
– Close all vehicle doors.

Protected by copyright. Copying for private or commercial purposes, in part or in whole, is not permitted unless authorised by Volkswagen AG. Volkswagen AG does not guarantee or accept any liability with respect to the correctness of information in this document. Copyright by Volkswagen AG.
satelettronica

Note

- *Battery temperature must be at least 10 °C.*
- *For additional information, refer to the ⇒ operating manual INC 940 .*

Perform charging procedure:

– Switch off all electrical consumers.

– Switch off ignition and remove ignition key.

– Connect red terminal clamp “+” of charger unit to positive terminal on battery.

Note

In vehicles with start/stop function and battery monitor control unit - J367- fitted, black terminal clamp “–” must be connected to body earth. Connecting it to battery negative terminal will cause start/stop system to malfunction.

– Connect black terminal clamp “–” of battery charger to negative terminal.

– Connect Midtronics - INC 940- battery charger to an earthed socket.

– Set “ON/OFF” switch of Midtronics - INC 940- battery charger to “ON”.

– Select “Automatic” or “Manual” charging mode.

– Select test “In vehicle” or “Outside vehicle”.

– Select battery type “Standard” or “AGM” (absorbent glass mat).

– Select test type “Warranty” or “Miscellaneous”. Note additional details (depending on type of test).

Note

- *For additional information, refer to the ⇒ operating manual INC 940 .*
- *If necessary, make a note of menu items required for “Warranty” test type ⇒ Warranty service circular.*

Midtronics - INC 940- battery charger tests battery and starts charging procedure. Display then shows one of three results, as well as approximate charging time.

Result:	Measures:
Battery OK	Battery can be returned to operation.

Protected by copyright. Copying for private or commercial purposes, in part or in whole, is not permitted unless authorised by Volkswagen AG. Volkswagen AG does not guarantee or accept any liability with respect to the correctness of information in this document. Copyright by Volkswagen AG.
satelettronica

Result:	Measures:
Charging required	♦ Test found low charge level. ♦ Charging starts and approximate charging duration is displayed. ♦ Achieved cold-start performance and remaining charging time are displayed, and are updated regularly.
Renew battery	Battery defective. Charging procedure is interrupted. Renew battery.

Note

In case Midtronics - INC 940- shows fault messages or text displays other than those listed above, please refer to ⇒ page 75 .

WARNING

Stop charging if battery is liberating a lot of gas. Press "Stop" button on front.

When charging and testing procedure has finished, Midtronics - INC 940- battery charger displays "Battery good" or "Renew battery" and total charging time.

There are three possible messages depending on individual circumstance (printout for warranty, repair job, evaluation and filing):

- Generate test code (only possible after automatic charging and test).
- Print last test result (for warranty).
- Display last test results.

Note

For additional information, refer to the ⇒ operating manual INC 940 .

3.7.3 Dealing with problems with Midtronics - INC 940- battery tester

Under certain circumstances, the display may show errors or messages according to status.

The most frequent display messages are listed below, together with suggested solutions.

Note

For messages not listed here, please refer to ⇒ operating manual INC 940 .

Protected by copyright. Copying for private or commercial purposes, in part or in whole, is not permitted unless authorised by Volkswagen AG. Volkswagen AG does not guarantee or accept any liability with respect to the correctness of information in this document. Copyright by Volkswagen AG.

sateletronica

Display message	Measure
Check connection.	– Check whether terminals of battery charger are firmly connected to battery terminals. – Check battery terminals are tightened according to regulations and do not have corrosion.
Terminals connected?	Safety function of tester. – Connect terminals to battery before starting charging procedure.
System noise	– Switch off all electrical consumers. – Wait until all electrical loads monitored by on-board supply control unit have switched off. – Pull out ignition key. – Disconnect any suspect electrical equipment not connected to on-board supply as standard.

Wait a few minutes and repeat charging procedure ⇒ page 73 .

3.8 Solar charger module - VAS 6102B-

3.8.1 Charging battery in trickle charge mode with solar panel - VAS 6102B-

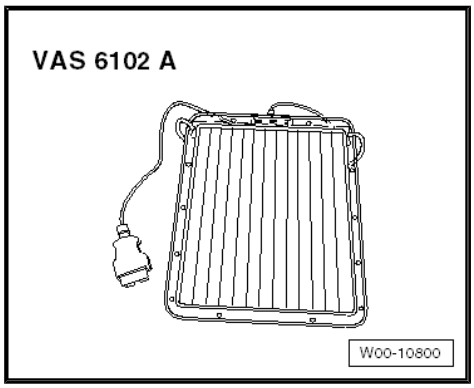

Solar charger module VAS 6102B

General description:

Solar panel - VAS 6102B- supports onboard supply and prevents spontaneous discharging of battery.

Solar charger module - VAS 6102B- achieves max. voltage of 14.3 V and a charge current of max. 255 mA.

Solar charger module - VAS 6102B- is allowed to be used for charging all rechargeable lead or lead gel batteries.

Solar charger module - VAS 6102B- is connected to diagnostic connection in vehicle.

A green LED is integrated in the frame to indicate its function. The brighter the LED, the higher the charging current.

Integrated electronics prevent battery overcharging.

Protected by copyright. Copying for private or commercial purposes, in part or in whole, is not permitted unless authorised by Volkswagen AG. Volkswagen AG does not guarantee or accept any liability with respect to the correctness of information in this document. Copyright by Volkswagen AG.
satelettronica

– Secure solar panel - VAS 6102B- on interior mirror -1-.
– Place underside on dash panel -2-.

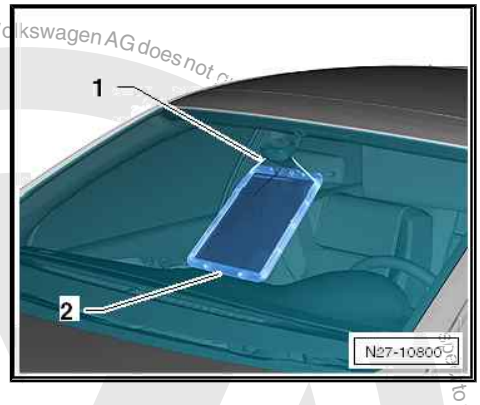

Note

Solar charger module - VAS 6102B- is not allowed to lie fully on dash panel. It is only allowed to be positioned with the bottom edge for support. Placing it fully on the surface can result in discolouration of the dash panel.

– Pull attachment string tight so that solar charger module - VAS 6102B- is positioned close to windscreen.
– Connect solar panel - VAS 6102B- to diagnostic connection of vehicle. Connection procedure is as for vehicle diagnostic tester ⇒ page 96
– Check function of solar panel - VAS 6102B- . Green LED indicates function of solar panel - VAS 6102B- .

3.9 Totally discharged batteries

WARNING

Danger of injury! Observe warning notices and safety regulations ⇒ page 3 !

A battery is designated “totally discharged” when the no-load voltage is less than 11.6 V.

WARNING

It is not permissible to test or charge batteries whose magic eye shows light yellow. Do not slave/jump start the vehicle!

Danger of explosion when checking and charging or slave/jump starting.

These batteries must be renewed.

Caution

- *Totally discharged batteries freeze prematurely.*
- *Frozen batteries should no longer be used.*

Protected by copyright. Copying for private or commercial purposes, in part or in whole, is not permitted unless authorised by Volkswagen AG. Volkswagen AG does not guarantee or accept any liability with respect to the correctness of information in this document. Copyright by Volkswagen AG.
satelettronica

Note

- *Totally discharged batteries in unregistered vehicles must be exchanged prior to delivery. Preliminary damage cannot be excluded.*
- *Batteries that have not been used for a long period of time discharge themselves, e.g. those fitted in stored vehicles.*
- *In totally discharged batteries, the electrolyte is comprised almost entirely of water because the acid content is so low.*
- *Totally discharged batteries sulphate, that means, the entire plate surfaces of the battery harden.*
- *If a battery is recharged shortly after it has totally lost its charge, the sulphation will mostly dissipate.*
- *If these batteries are not recharged, the plates continue to harden and the ability to recharge is reduced. The result of which is a reduction in the battery output.*

– Check battery no-load voltage ⇒ page 22 .

Protected by copyright. Copying for private or commercial purposes, in part or in whole, is not permitted unless authorised by Volkswagen AG. Volkswagen AG does not guarantee or accept any liability with respect to the correctness of information in this document. Copyright by Volkswagen AG.

satelettronica

Protected by copyright. Copying for private or commercial purposes, in part or in whole, is not permitted unless authorised by Volkswagen AG. Volkswagen AG does not guarantee or accept any liability with respect to the correctness of information in this document. Copyright by Volkswagen AG.

4 Cruise control system (CCS)

General description:

The functions of the cruise control system are controlled by the engine control unit.

– The cruise control system can be activated/deactivated ⇒ page 79 .

Fault detection and fault display:

Faults on the CCS are output via the engine control unit.

For fault finding, use vehicle diagnosis, testing and information system in “Guided fault finding” mode.

4.1 Activating and deactivating cruise control system (CCS)

– Connect vehicle diagnostic tester ⇒ page 96 .

– Select “Guided fault finding” mode in vehicle diagnostic tester .

– Using the “GoTo” button, select “Function/component selection” and the following menu items in succession:

- Drive
- Engine code
- 01 - Systems capable of self-diagnosis
- Engine management/diesel direct injection and glow plug system
- Functions
- Activating and deactivating cruise control system (CCS)

satelettronica

90 – Gauges, instruments

satelettronica

Protected by copyright. Copying for private or commercial purposes, in part or in whole, is not permitted unless authorised by Volkswagen AG. Volkswagen AG does not guarantee or accept any liability with respect to the correctness of information in this document. Copyright by Volkswagen AG.

92 – Windscreen wash/wipe system

1 Washer fluid line hose couplings

The following hose coupling types are used to connect the hose connection to pumps and washer jets and/or as points of separation:

1.1 Windscreen and rear window washer system

– Pull the two coupling sections apart (no securing device) to loosen the connection.

– To secure the connection, push the two coupling sections together, until you hear and feel them engage.

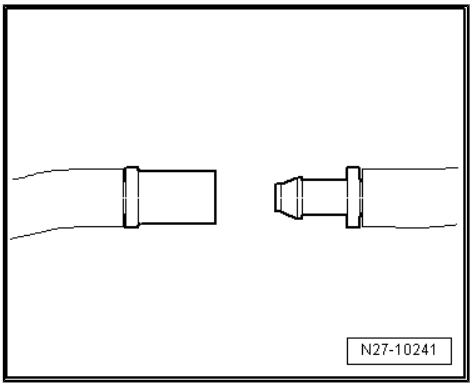

– To loosen the connection, rotate the lock ring -1- 90° -arrow- and pull off the hose connection.

– To secure the connection, push on the hose connection and rotate the lock ring -1- -arrow- until it engages.

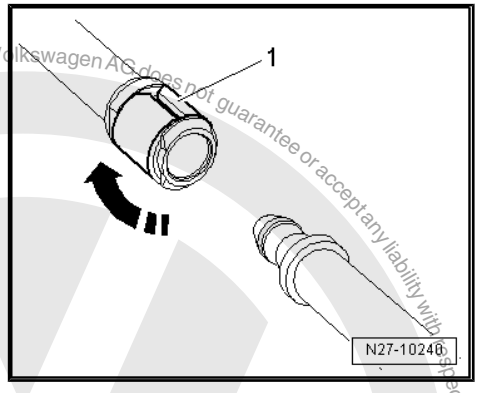

– To loosen the connection, pull up the lock ring -1- by approx. 1 mm -arrow-, and pull off the hose connection.

– To secure connection, attach hose connection and press in clip -1- until it engages.

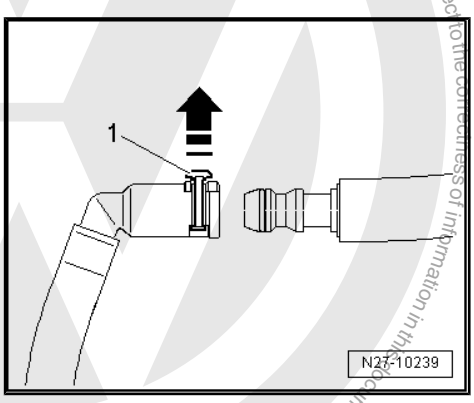

Protected by copyright. Copying for private or commercial purposes, in part or in whole, is not permitted unless authorised by Volkswagen AG. Volkswagen AG does not guarantee or accept any liability with respect to the correctness of information in this document. Copyright by Volkswagen AG.
satelettronica

– To loosen the connection, pull up the lock ring -1- -arrow- and pull off the hose connection.
– To secure connection, attach hose connection and press in clip -1- until it engages.

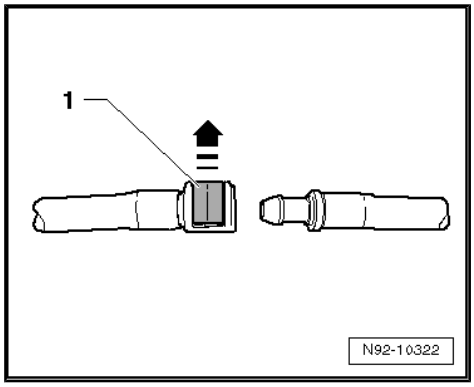

1.2 Headlight washer system

– To loosen the connection, push the lock ring -1- -arrow- and pull off the hose connection.
– To secure the connection, push and hold the lock ring -arrow- and push on the hose connection. Check that the securing clip has correctly engaged by depressing and trying to pull off without the clip.

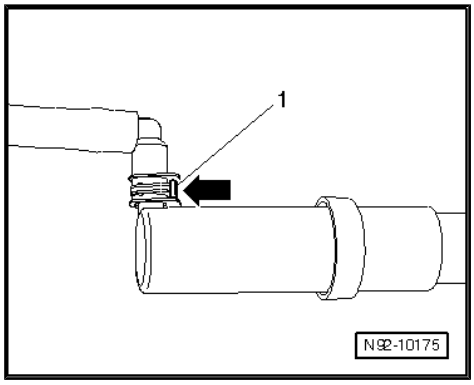

Protected by copyright. Copying for private or commercial purposes, in part or in whole, is not permitted unless authorised by Volkswagen AG. Volkswagen AG does not guarantee or accept any liability with respect to the correctness of information in this document. Copyright by Volkswagen AG.

satelettronica

2 Hose repair

A new repair concept has been developed for repair work on wash system hoses. Various connectors, special EPDM hoses (ethylene-propylene-diene monomer) and heat-shrink hose are available as spare parts.

2.1 General description

- The replacement parts can be found in the electronic parts catalogue (ETKA).
- Replacement parts are available for repair of both smooth and corrugated pipes.

2.2 Repairing smooth pipe

Smooth pipes with a diameter of 5x1 mm or 6x1 mm can be repaired with EPDM hose.

– Cut damaged section at right angles out of smooth pipe which is to be repaired.

– Select the appropriate EPDM hose -2- and cable ties according to the electronic parts catalogue (ETKA).

– Cut EPDM hose -2- so that ends -1- and -3- of smooth pipe can each be pushed about 10 mm into the EPDM hose -2-.

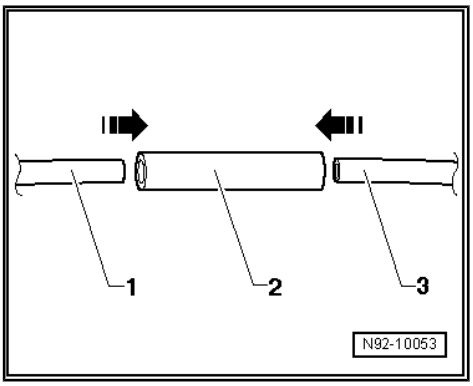

– Secure the repair joints with cable ties -1-.

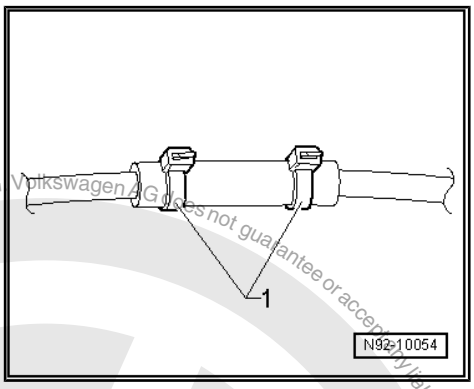

2.3 Repairing corrugated pipe

Special tools and workshop equipment required

- Hot air blower - VAS 5179- or

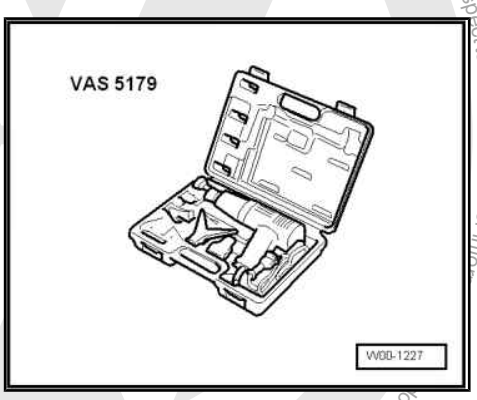

- Hot air blower - V.A.G 1416/- or
- Hot air blower - VAS 1978/14-

Protected by copyright. Copying for private or commercial purposes, in part or in whole, is not permitted unless authorised by Volkswagen AG. Volkswagen AG does not guarantee or accept any liability with respect to the correctness of information. Copyright by Volkswagen AG.
satelettronica

Note

- *Repair points must not be subjected to pulling or bending forces.*
- *If the damaged section is longer than 20 mm, a new piece of corrugated pipe must be used and the procedure described below must be performed twice.*

– Cut damaged section at right angles out of corrugated pipe which is to be repaired.
– Select suitable end pieces -2- and -3- and correct sized shrink-fit piping from the electronic parts catalogue (ETKA).
– Heat end of corrugated tube -1-.
– Push connector -2- into corrugated tube -2- -arrow A-.
– Heat end of corrugated tube -4-.
– Push connector -3- into corrugated tube -4- -arrow B-.

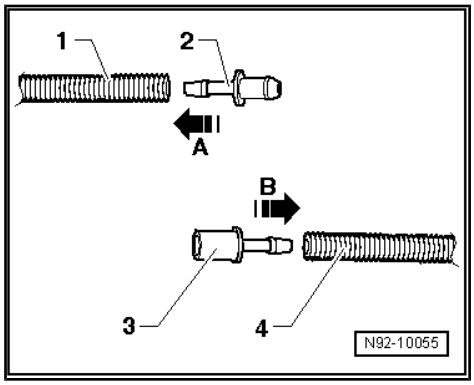

– Cut heat-shrink hose so that ends of corrugated tube are each covered by about 20 mm -dimension x- of heat-shrink hose.
– Push heat-shrink hose over corrugated tube, join connectors and secure repair joints with heat-shrink hose.

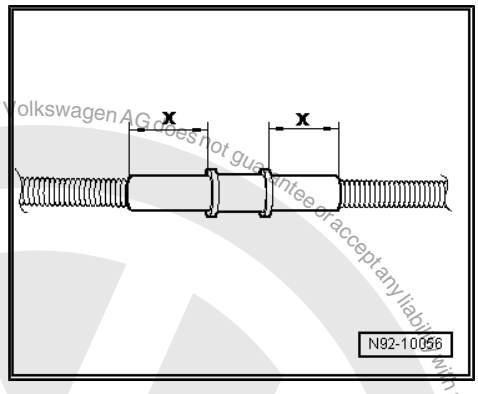

Protected by copyright. Copying for private or commercial purposes, in part or in whole, is not permitted unless authorised by Volkswagen AG. Volkswagen AG does not guarantee or accept any liability with respect to the correctness of information in this document. Copyright by Volkswagen AG.
satelettronica

3 Distinguishing features of jointless wiper blades

Distinguishing features of Bosch and Federal Mogul products.

When renewing wiper rubbers, note the make. When renewing wiper blades, the same make must be used.

Wiper blades can be identified according to wiper arm fastening.

Bosch wiper blades -1 and 2-:

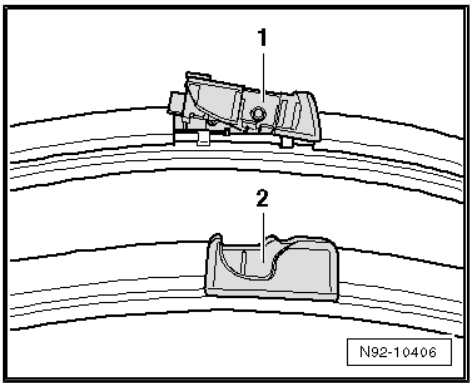

Federal Mogul wiper blades -1-:

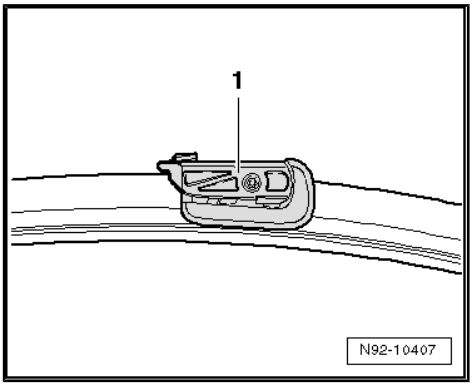

Protected by copyright. Copying for private or commercial purposes, in part or in whole, is not permitted unless authorised by Volkswagen AG. Volkswagen AG does not guarantee or accept any liability with respect to the correctness of information in this document. Copyright by Volkswagen AG.

satelettronica

94 – Lights, bulbs, switches - exterior

1 Operation and safety notes for gas discharge lamps

– If repairs are to be made to the headlight with gas discharge bulbs, observe the following:

- Notes on dangerous high voltage/currents ⇒ page 86
- Notes on pressure, temperature, radiation/arcs ⇒ page 87
- Assembly notes for gas discharge bulbs ⇒ page 88
- Disposal regulations for gas discharge bulbs ⇒ page 88

Special tools and workshop equipment required

- Safety goggles
- Gloves

> **WARNING**
>
> *It is absolutely necessary to disconnect the battery earth strap before working on parts of the gas discharge headlights marked with yellow high voltage symbols.*
>
> *Then switch dipped beam on and off again. This will eliminate any possible residual voltage.*
>
> *The gas discharge lamp control unit must never be operated without a gas discharge lamp.*
>
> *Due to the high voltage (above 28000 V when igniting the gas discharge bulb) and high temperatures, the gas discharge bulb must only be operated in the headlight housing.*

> **WARNING**
>
> - *Never change bulbs if you are not familiar with the appropriate procedures, safety precautions and tools.*

Notes on dangerous high voltage and current

> **WARNING**
>
> *Control units for light systems, connectors and components pertaining to bulb holders conduct lethally high voltage.*
>
> *Operating the control unit and the starter unit is permitted only with the bulb fitted.*

Protected by copyright. Copying for private or commercial purposes, in part or in whole, is not permitted unless authorised by Volkswagen AG. Volkswagen AG does not guarantee or accept any liability with respect to the correctness of information in this document. Copyright by Volkswagen AG.
satelettronica

WARNING

- *Switch off ignition and all electrical consumers and remove ignition key.*
- *When working on the headlight system, ensure that there is no voltage in any component, including dissipation of residual voltage after the headlights are switched off.*
- *Residual voltage can be dissipated by turning the dipped beams on and then off again after withdrawing the ignition key.*
- *When working on the headlight system, ensure that the lights cannot be switched on.*

Notes on pressure, temperature, radiation/arcs

WARNING

- *The bulbs may be operated in the headlight housing only (protection against contact due to very hot bulbs, absorption of UV radiation, avoidance of dazzling light, protection against explosion).*
- *The glass of the bulbs can become very hot - danger of burns!*
- *Avoid looking directly into the beam, as the UV rays from the gas discharge bulb are about 2.5 times greater than normal halogen bulbs.*
- *Avoid looking into the light beam (danger of glare); vision may be impaired for a substantial time.*

WARNING

- *Avoid contact with burst glass part of the bulbs.*
- *H7 bulbs and gas discharge bulbs (xenon and bi-xenon) are under pressure and can explode while being changed – danger of injury.*
- *Always wear eye protection and gloves when removing and installing gas discharge lamps!*

Protected by copyright. Copying for private or commercial purposes, in part or in whole, is not permitted unless authorised by Volkswagen AG. Volkswagen AG does not guarantee or accept any liability with respect to the correctness of information in this document. Copyright by Volkswagen AG.

satelettronica

Assembly notes for gas discharge bulbs

Caution

- *Always switch off the affected consumers before exchanging a bulb.*
- *Switch off ignition and all electrical consumers and remove ignition key.*
- *Do not touch the glass part of the bulb with bare fingers; use clean cloth gloves. When the light bulb is switched on, the heat would vaporise the oil of the finger prints which would then settle on the reflector, impairing the brightness of the headlight.*
- *A light bulb must always be renewed with a bulb of the same sort. The designation appears on the base of the bulb or on the bulb glass.*
- *Properly engage connectors during installation and the connection is seated tightly.*

Disposal regulations for gas discharge bulbs

WARNING

- *Gas discharge bulbs must be disposed of as hazardous waste; never dispose of gas discharge bulbs as consumer waste.*
- *Gas discharge bulbs contain metallic mercury (Hg) and traces of thallium; never destroy these bulbs.*
- *These components must be recycled in the correct manner according to national law.*
- *Only dispose of in containers intended for this purpose at an authorised collection point.*

Protected by copyright. Copyright by Volkswagen AG. Volkswagen AG does not guarantee or accept any liability with respect to the correctness of information in this document. Copyright by Volkswagen AG.
satelettronica

96 – Lights, bulbs, switches - interior

1 12 V socket

1.1 Removing and installing 12 V socket

Caution

If excessive force is exerted on sockets without illumination, the retaining sleeve may be damaged.

Only illuminated sockets (cigarette lighter) can be removed with the puller T 40148.

The puller does not manage to release the locking lugs of sockets without illuminated retaining sleeve.

Usually sockets without illumination cannot be removed without being damaged.

Refer to removing and installing cigarette lighter - U1- ⇒ page 90 .

1.2 Removing and installing socket illumination bulb - L42-

The removal of the socket illumination bulb - L42- is performed in the same way as the removal of the cigarette lighter illumination bulb - L28- ⇒ page 94 .

Protected by copyright. Copying for private or commercial purposes, in part or in whole, is not permitted unless authorised by Volkswagen AG. Volkswagen AG does not guarantee or accept any liability with respect to the correctness of information in this document. Copyright by Volkswagen AG.
satelettronica

2 Cigarette lighter - U1-

The following descriptions apply to the rear left cigarette lighter - U3- , rear right cigarette lighter - U7- , rear cigarette lighter - U9- , 12 V socket 2 - U18- , 12 V socket 3 - U19- , 12 V socket 4 - U20- , cigarette lighter 2 - U25- and 12 V socket 5 - U26- so far as they are illuminated.

Caution

If excessive force is exerted on sockets without illumination, the retaining sleeve may be damaged.

Only illuminated sockets (cigarette lighter) can be removed with the puller T 40148.

The puller does not manage to release the locking lugs of sockets without illuminated retaining sleeve.

Usually sockets without illumination cannot be removed without being damaged.

2.1 General description

Caution

If excessive force is exerted on sockets without illumination, the retaining sleeve may be damaged.

Only illuminated sockets (cigarette lighter) can be removed with the puller T 40148.

The puller does not manage to release the locking lugs of sockets without illuminated retaining sleeve.

Usually sockets without illumination cannot be removed without being damaged.

On some vehicles, the illumination is not provided by a light bulb, but by an LED (light-emitting diode), depending on the equipment level. This LED is permanently attached to the retaining sleeve and cannot be renewed separately.

Retaining sleeves with a light bulb are available in different versions. On the one version, the light bulb can be replaced separately; on the other version, the light bulb cannot be replaced separately. In this case, the bulb carrier has to be replaced together with the light bulb.

Depending on the space requirement, the vehicles are equipped with various electric sockets and cigarette lighter sockets. They differ in length and have different electrical connections. In the case of electric sockets or cigarette lighter sockets with a wiring tail, it may be necessary to perform additional work in order to gain access to the connector.

Protected by copyright. Copying for private or commercial purposes, in part or in whole, is not permitted unless authorised by Volkswagen AG. Volkswagen AG does not guarantee or accept any liability with respect to the correctness of information in this document. Copyright by Volkswagen AG.
satelettronica

2.2 Assembly overview

Caution

If excessive force is exerted on sockets without illumination, the retaining sleeve may be damaged.

Only illuminated sockets (cigarette lighter) can be removed with the puller T 40148.

The puller does not manage to release the locking lugs of sockets without illuminated retaining sleeve.

Usually sockets without illumination cannot be removed without being damaged.

1 - Cigarette lighter socket with wiring tail

2 - Cigarette lighter

3 - Electric socket

4 - Cigarette lighter socket

5 - Clamping sleeve

6 - Light bulb W 5 12 V 1.2 watt

7 - Bulb carrier

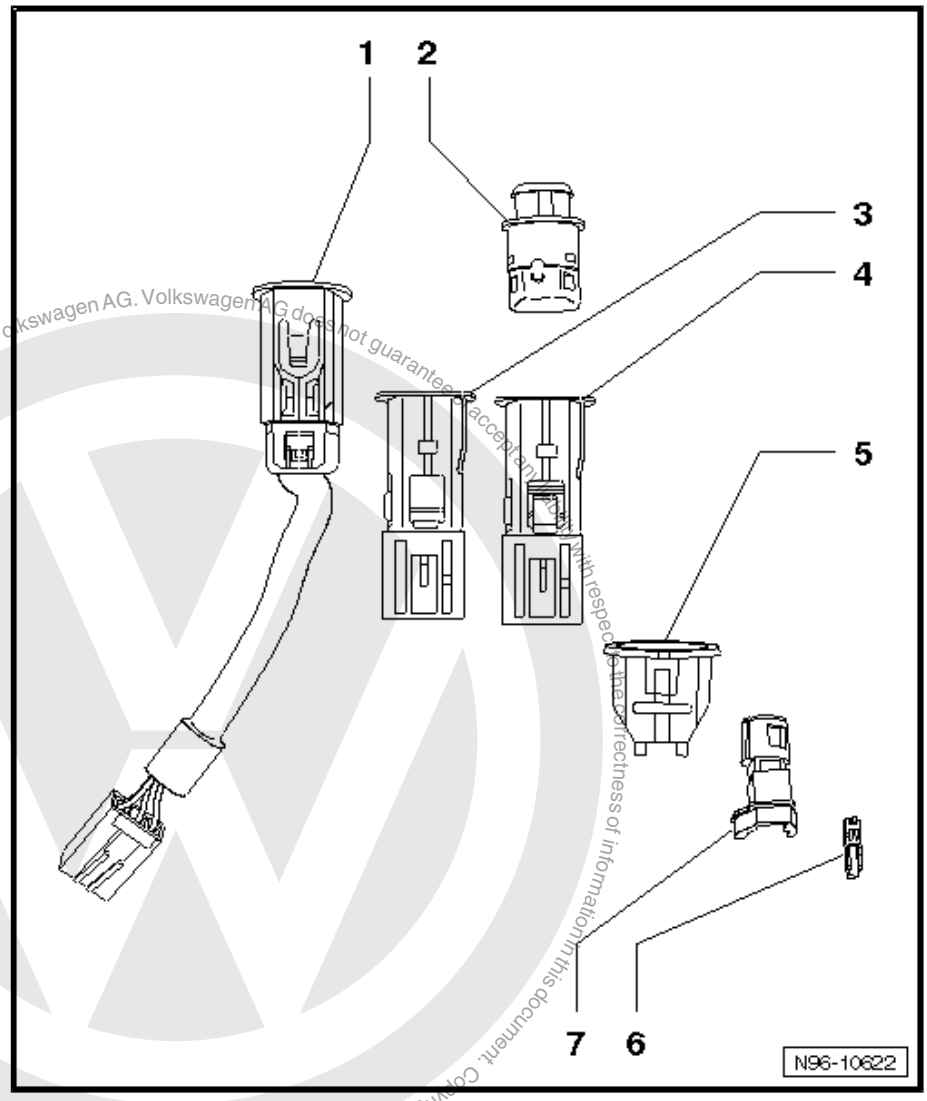

Protected by copyright. Copying for private or commercial purposes, in part or in whole, is not permitted unless authorised by Volkswagen AG. Volkswagen AG does not guarantee or accept any liability with respect to the correctness of information in this document. Copyright by Volkswagen AG.
satelettronica

2.3 Removing and installing cigarette lighter socket

Note

The removal and installation procedure is the same for all sockets and is therefore described here only for the cigarette lighter socket.

Caution

If excessive force is exerted on sockets without illumination, the retaining sleeve may be damaged.

Only illuminated sockets (cigarette lighter) can be removed with the puller T 40148.

The puller does not manage to release the locking lugs of sockets without illuminated retaining sleeve.

Usually sockets without illumination cannot be removed without being damaged.

Special tools and workshop equipment required

- Puller - T 40148-

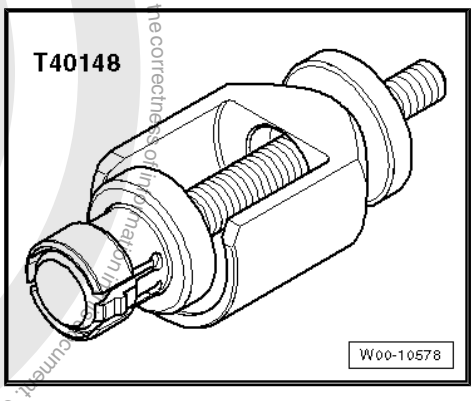

Removing:

– Remove cigarette lighter, dummy cigarette lighter etc. from socket if necessary.

Note

For reasons of clarity, the socket is removed in the illustration.

Caution

The socket or the retaining sleeve can be damaged.

Ensure that the puller is seated correctly, otherwise the retaining lugs of the retaining sleeve will not be released.

satelettronica

– Push puller -arrow- into socket so that locking lugs -1- engage in recesses -2-.

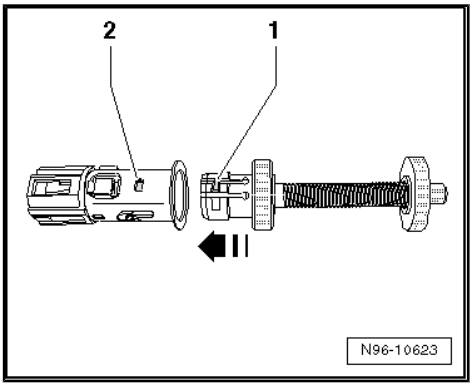

– Pull grip -3- in direction of -arrow- to release locking lugs of retaining sleeve.

– Pull socket out of retaining sleeve using puller.

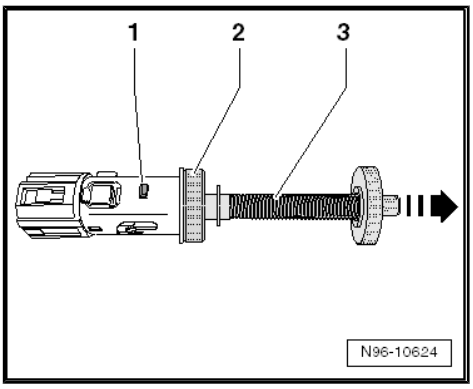

Caution

The socket wiring can be damaged.

Take care not to stretch the wiring when pulling out the socket.

Depending on the fitting location, it is recommended to use the thrust piece 40148/1 -2- with the knurled nut -1-.

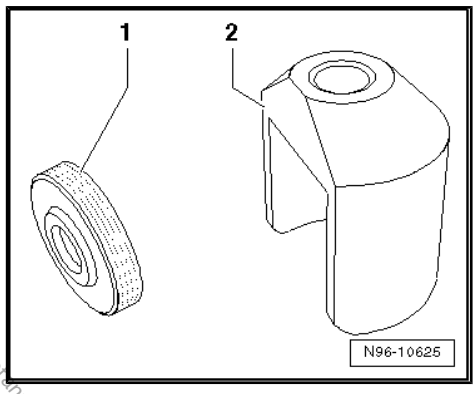

Caution

When using the thrust piece, ensure that no surrounding components are damaged.

– Pull off socket connector.

Note

Depending on the space requirement, the vehicles are equipped with various electric sockets and cigarette lighter sockets. They differ in length and have different electrical connections. In the case of electric sockets or cigarette lighter sockets with a wiring tail, it may be necessary to perform additional work in order to gain access to the connector.

Protected by copyright. Copying for private or commercial purposes, in part or in whole, is not permitted unless authorised by Volkswagen AG. Volkswagen AG does not guarantee or accept any liability with respect to the correctness of information in this document. Copyright by Volkswagen AG.

satelettronica

– Release puller locking lugs by pressing spindle -1- in direction of -arrow B-. Then release puller -2- by turning it briefly to left -arrow A-. Remove puller from socket.

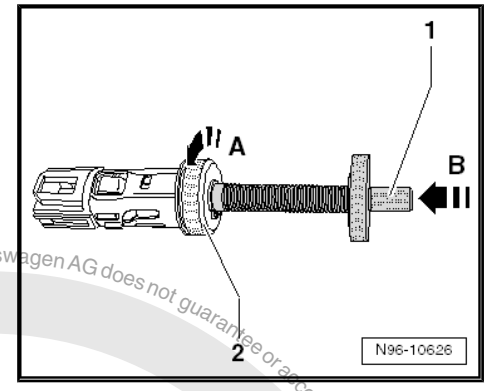

Note

Ensure that the puller locking lugs are not spread.

Caution

The cigarette lighter might be ejected out of the socket after the heating phase.

When the puller is mounted, the socket retaining springs are pressed apart and the retaining force is reduced.

After removing the socket, carefully press the retaining springs together and check if the cigarette lighter remains in the removal position after the heating phase.

– Carefully press socket retaining springs together -arrows-.

– Check if cigarette lighter remains in removal position after heating phase and ensure it is not ejected in vehicle interior.

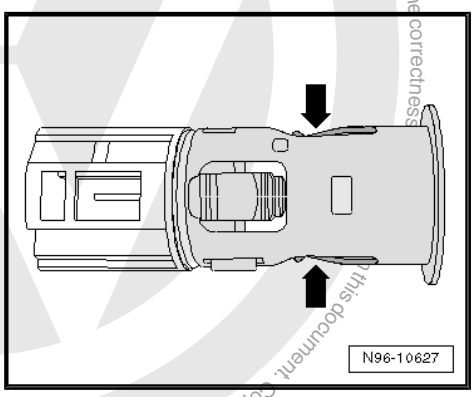

Installing:

Installation is carried out in the reverse sequence of removal.

2.4 Removing and installing cigarette lighter illumination bulb - L28-

Note

- *On some vehicles, the illumination is not provided by a light bulb, but by an LED (light-emitting diode), depending on the equipment level. This LED is permanently attached to the retaining sleeve and cannot be renewed separately.*
- *Retaining sleeves with a light bulb are available in different versions. On the one version, the light bulb can be replaced separately; on the other version, the light bulb cannot be replaced separately. In this case, the bulb carrier has to be replaced together with the light bulb.*

Removing:

– Remove socket ⇒ page 92 .

Protected by copyright. Copying for private or commercial purposes, in part or in whole, is not permitted unless authorised by Volkswagen AG. Volkswagen AG does not guarantee or accept any liability with respect to the correctness of this document. Copyright by Volkswagen AG.
satelettronica

– Press retaining lugs -arrows- and remove retaining sleeve together with bulb carrier.
– Unclip bulb carrier from retaining sleeve.

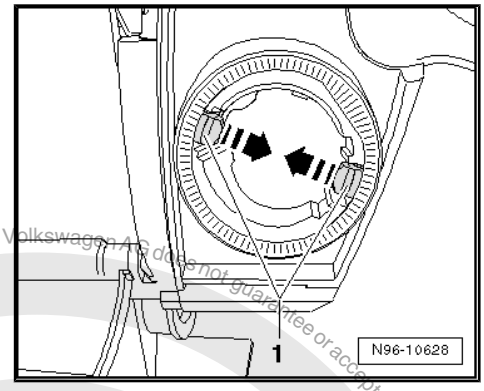

– Separate bulb carrier in areas -A- and -B-.
– Open part -B- of bulb carrier.

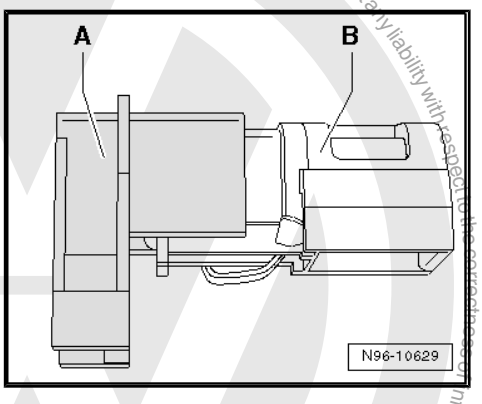

– Remove light bulb in direction of -arrow-.

Installing:

Installation is carried out in the reverse sequence of removal.

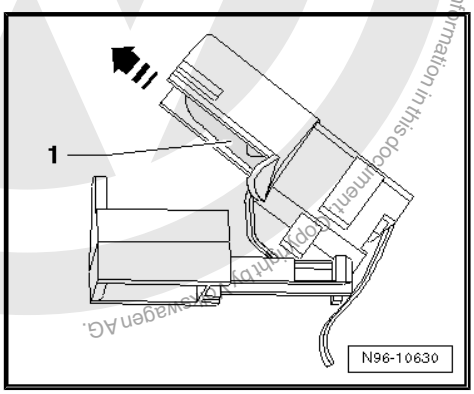

Protected by copyright. Copying for private or commercial purposes, in part or in whole, is not permitted unless authorised by Volkswagen AG. Volkswagen AG does not guarantee or accept any liability with respect to the correctness of information in this document. Copyright by Volkswagen AG.
satelettronica

97 – Wiring

1 Vehicle diagnosis, testing and information systems

WARNING

- *During testing or measuring operations using a vehicle diagnostic information system there is a risk of serious or even fatal injury!*
- *If the vehicle diagnostic information system is situated in the activation area of an airbag during testing or measuring operations, serious or even fatal injury may result if an airbag is triggered!*
- *During testing and measuring operations, work with a person who can operate the vehicle diagnostic and information system from one of the back seats.*

Note

- *All the operations described, e.g. adaptation, coding, etc. can be performed using the vehicle diagnostic tester .*
- *All work procedures can be found in "guided fault finding" and "guided functions" modes.*
- *Additional information:*

⇒ Self-study programme No. 202 ; Vehicle diagnostic, testing and information system VAS 5051

⇒ Self-study programme No. 256 ; VAS 5052

⇒ Self-study programme No. 294 ; Online connection of VAS 5051

– Connect vehicle diagnostic tester ⇒ page 96 .

1.1 Connecting vehicle diagnostic tester

Note

Observe the latest operating instructions for vehicle diagnostic tester , which are displayed after selecting the "Administration" and "Operating Manual" keys.

Special tools and workshop equipment required

Protected by copyright. Copyright by Volkswagen AG. Volkswagen AG does not guarantee or accept any liability with respect to the correctness of information in this document. Copyright by Volkswagen AG. Reproduction in part or in whole, is not permitted unless authorized by Volkswagen AG.
satelettronica

♦ Vehicle diagnostic tester

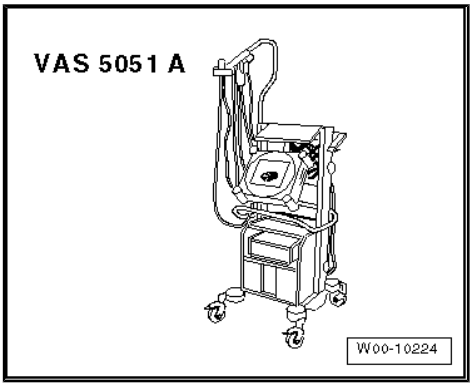

♦ Diagnostic cable - VAS 5051/6A- (5 m)

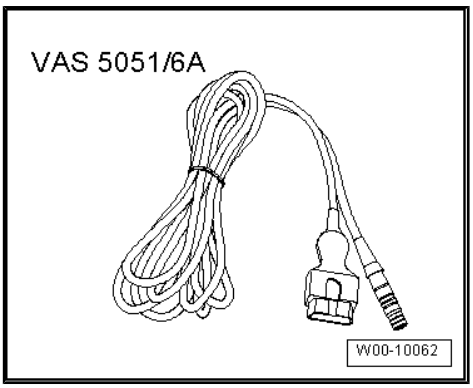

♦ Diagnostic cable - VAS 5051/5A- (3 m)

Note

Only these cables are to be used for diagnosis, as they are the only ones fitted with CAN wiring and therefore allowing CAN diagnosis and/or CAN communication.

Connecting vehicle diagnostic tester :

– Apply handbrake.
– Vehicles with automatic gearbox, move selector lever to position “P” or “N”.
– Vehicles with manual gearbox, move gear lever to neutral position.
– With ignition switched off, connect vehicle diagnostic tester using diagnostic cable - VAS 5051/6A- to diagnostic interface -arrow- in vehicle.
– Switch on ignition.
– Switch off all electrical consumers.

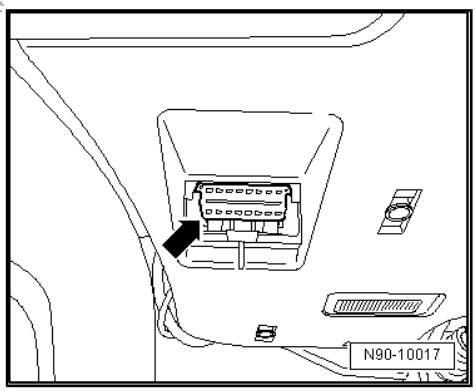

Note

All other and the following vehicle diagnosis, testing and information systems or vehicle diagnostic and service information systems are connected accordingly in the sequence described above.

Protected by copyright. Copying for private or commercial purposes, in part or in whole, is not permitted unless authorised by Volkswagen AG. Volkswagen AG does not guarantee or accept any liability with respect to the correctness of information in this document. Copyright by Volkswagen AG.

satelettronica

1.2 Connecting vehicle diagnostic tester Golf Model Year 1998 - 2003

– Apply handbrake.

– Vehicles with automatic gearbox, move selector lever to position “P” or “N”.

– Vehicles with manual gearbox, move gear lever to neutral position.

– Pull out trim -1- in direction of arrow.

– With ignition switched off, connect vehicle diagnostic tester using diagnostic cable to diagnostic interface -arrow- in vehicle.

– Switch on ignition.

– Switch off all electrical consumers.

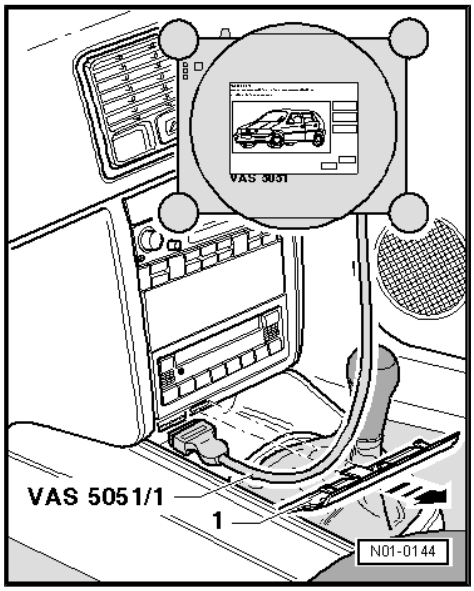

Note

All other and the following vehicle diagnosis, testing and information systems or vehicle diagnostic and service information systems are connected accordingly in the sequence described above.

satelettronica

Protected by copyright. Copying for private or commercial purposes, in part or in whole, is not permitted unless authorised by Volkswagen AG. Volkswagen AG does not guarantee or accept any liability with respect to the correctness of information in this document. Copyright by Volkswagen AG.

2 Repairs to wiring harnesses and connectors

2.1 General notes concerning repairs to vehicle electrical system

Caution

When batteries are disconnected and reconnected, the procedure described in the workshop manual must be strictly observed.

WARNING

Some tools are equipped with a tool safety device. This must be pushed over the tip of the tool after use in order to protect the tip and prevent personal injury.

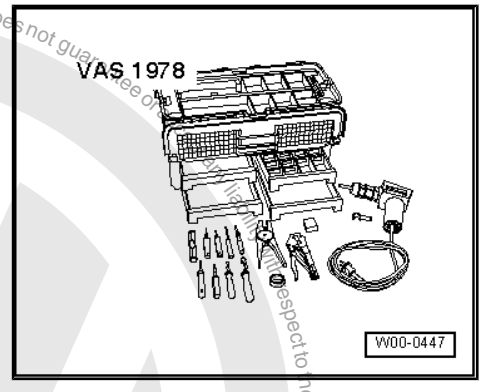

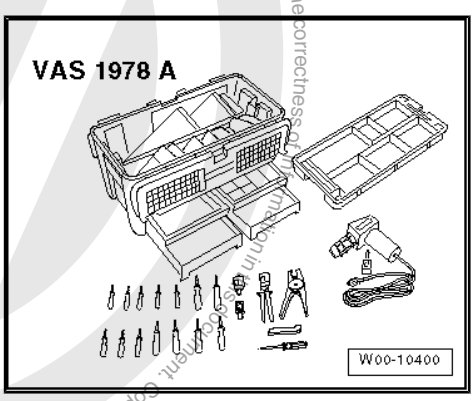

Protected by copyright. Copying for private or commercial purposes, in part or in whole, is not permitted unless authorised by Volkswagen AG. Volkswagen AG does not guarantee or accept any liability with respect to the correctness and completeness of this document. Copyright by Volkswagen AG.
satelettronica

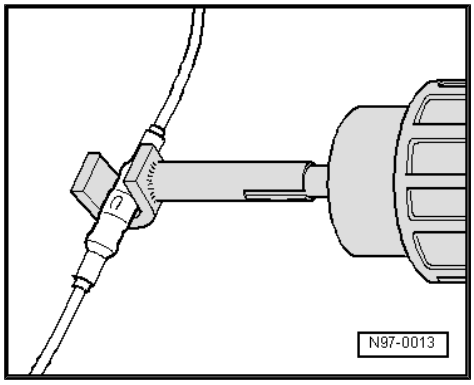

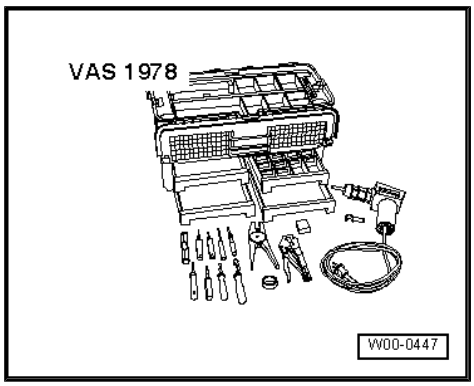

Protected by copyright. Copying for private or commercial purposes, in part or in whole, is not permitted unless authorised by Volkswagen AG. Volkswagen AG does not guarantee or accept any liability with respect to the correctness of information in this document. Copyright by Volkswagen AG.

satelettronica

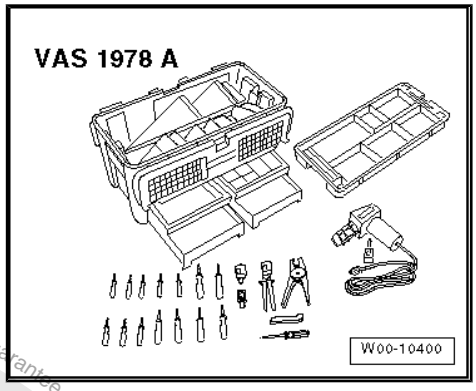

- Observe the latest notes in the respective workshop manual when carrying out repairs.
- Observe country-specific regulations.
- Always disconnect the battery earth strap before working on the electrical system. Disconnecting the battery earth strap (open circuit) provides a safe working environment for repairs to the electrical system. The battery positive wire need only be disconnected for removal of the battery.
- Before starting a repair, it is important to identify and rectify the cause of damage (e.g. sharp edges on body panels, defective electrical components, corrosion, etc.).
- For additional information, e.g. removal and installation of individual components, please refer to the relevant workshop manual.
- Soldering is not permitted for repairs to vehicle wiring.
- Wiring harness and connector repairs to vehicle electrical system should be carried out using wiring harness repair set - VAS 1978 B- and previous versions only. Only use yellow wires from wiring harness repair set - VAS 1978 B- .
- Wiring harness repairs may not be integrated in the vehicle's own wiring harness and must be marked with the use of yellow adhesive tape. This indicates a previous repair.
- Crimp connectors may never be repaired. If necessary, lay wiring parallel to the defective wiring. After crimping, the crimp connector has to be shrink fitted using the hot air blower in order to prevent any ingress of moisture.
- It is essential that the supplementary information is observed regarding repairs to wiring harnesses in airbag and belt tensioner systems, fibre optic cables, CAN bus lines, aerial cables and wiring with cross sections up to 0.35 mm^2 ⇒ page 110 .
- Carry out a function test after every repair. It may be necessary for the fault memory to be interrogated, erased and/or for the systems to be reset.
- If possible, do not loosen any earth wires from the body (danger of corrosion).
- Wiring harness repair set - VAS 1978 B- and previous versions do not cover all wiring cross sections that occur in the vehicle. If the required wiring cross section is not available, the next largest one should be used.
- Screened wires can be repaired. Wiring for camera systems are the exception. If damaged they must be replaced complete.
- Heat resistant wiring can be found in various places in the vehicle, mainly in the engine compartment. Heat resistant wiring can be identified by its slightly matt and softer insulation. To repair these wires, only heat resistant wiring may be used.

Copyright by Volkswagen AG. Copyright protected. Unauthorised copying or distribution prohibited. Volkswagen AG does not guarantee or accept any liability with respect to the correctness of information in this document.
satelettronica

2.2 Wiring harness repair set

2.2.1 Wiring harness repair set - VAS 1978-

Wiring harness repair set - VAS 1978- allows optimal repair quality to be achieved in the area of vehicle electrics. Using the tools, repairs to connectors and wiring open circuits can be carried out. To do this, complete repair wire sections with contacts already crimped on are used and joined to the vehicle's own wiring harness with the aid of crimp connectors. A special set of pliers with three different crimp recesses and a hot air blower for shrinking the crimp connectors make a perfect electrical connection.

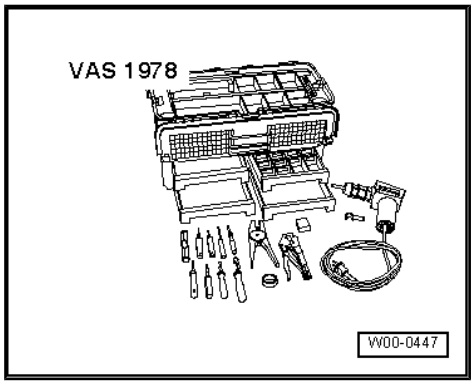

Note

Additional information:

⇒ Operating instructions Wiring harness repair set - VAS 1978-

2.2.2 Upgrade kit - VAS 1978/50-

Upgrade kit - VAS 1978/50- is required to bring the “old” wiring harness repair set - VAS 1978- up to the latest standard of wiring harness repair set - VAS 1978A- . The upgrade kit comprises of 4 assembly and 10 release tools, a new set of crimping pliers for crimp connectors with head adapter 0.35 - 2.5 mm^2 -VAS 1978/1-1- , 4.0 - 6.0 mm^2 -VAS 1978/2 A- and head adapter for JPT contacts - VAS 1978/9-1- . Also included are new stickers, a new set of operating instructions, crimp connectors for 0.35 mm^2 cable cross-section and a roll of black felt adhesive tape.

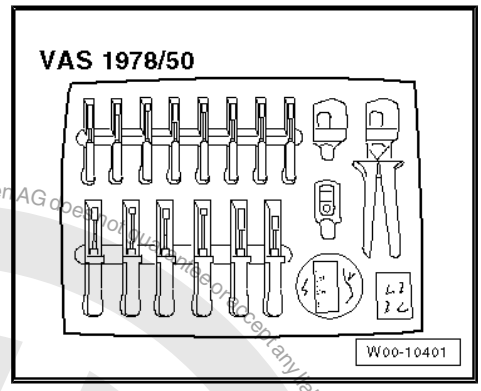

2.2.3 Wiring harness repair set - VAS 1978A-

The new wiring harness repair set - VAS 1978A- allows optimal repair quality to be achieved in the area of vehicle electrics. Using the new pliers, repairs to connectors and wiring open circuits can be carried out. To do this, complete repair wire sections with contacts already crimped on are used and joined to the vehicle's own wiring harness with the aid of four different types of crimp connectors. A new set of crimping pliers with head adapters and a hot air blower for shrinking the crimp connectors make a perfect electrical connection.

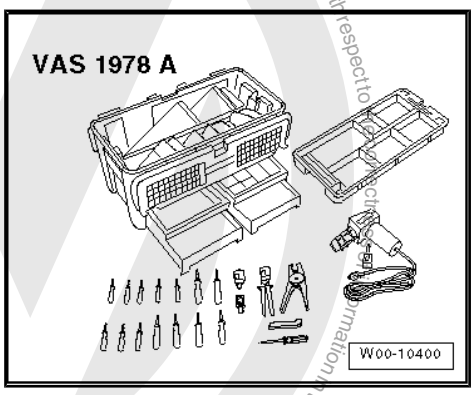

Note

Additional information:

⇒ Operating instructions Wiring harness repair set - VAS 1978A-

satelettronica
Protected by copyright. Copying for private or commercial purposes, in part or in whole, is not permitted unless authorised by Volkswagen AG. Volkswagen AG does not make any representation or warranty regarding the accuracy or completeness of the contents of this document, nor does it accept any liability with respect to the contents of this document. Copyright by Volkswagen AG.

2.2.4 Release tool set - VAS 1978/35-

Release tool set - VAS 1978/35- serves as a means of releasing various primary and secondary locking devices in Group vehicles. The set comprises of 26 different tools with which, for example, round connector systems, flat contacts with one or two fasteners and also single wire seals can be released or fitted.

Allocation of the correct release tool to the respective locking devices can be gleaned from the table in the ⇒ operating instructions of -VAS 1978/35- .

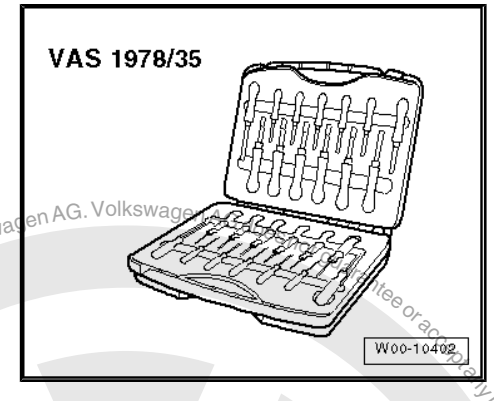

2.3 Tool descriptions

2.3.1 Special pliers with insert

The special pliers without insert - VAS 1978/1- with insert for special pliers - VAS 1978/2- is part of the wiring harness repair set - VAS 1978- and is used to crimp connectors during wiring harness repairs.

Colour of crimp connector	Colour of crimp recess	Wiring cross section
Yellow	Yellow	0.35 mm^2
Red	Red	0.5 mm^2 - 1.0 mm^2
blue	blue	1.5 mm^2 - 2.5 mm^2
Yellow	Yellow	4.0 mm^2 - 6.0 mm^2

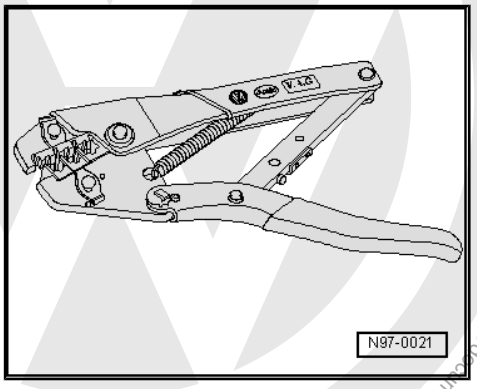

Note

- *As an alternative, the connectors can also be crimped with crimping pliers (base tool) - VAS 1978/1-2- in conjunction with head adapters -VAS 1978/1-1- or -VAS 1978/2A-* *⇒ page 105* .
- *Ensure without fail that the correct crimp recess is chosen for the crimp connectors being used.*
- *The insulation on the wires must not be crimped.*

Protected by copyright. Copying for private or commercial purposes, in any form or by any means, is not permitted unless authorised by Volkswagen AG. Volkswagen AG does not guarantee or accept any liability with respect to the correctness of information in this document. Copyright by Volkswagen AG.
satelettronica

2.3.2 Release tools for contacts

The various release tools serve as a means of detaching the different contacts from the contact housings without damage.

A selection of release tools is included in wiring harness repair set - VAS 1978- and wiring harness repair set - VAS 1978A- . The complete set of release tools is included in release tool set - VAS 1978/35- ⇒ page 103 .

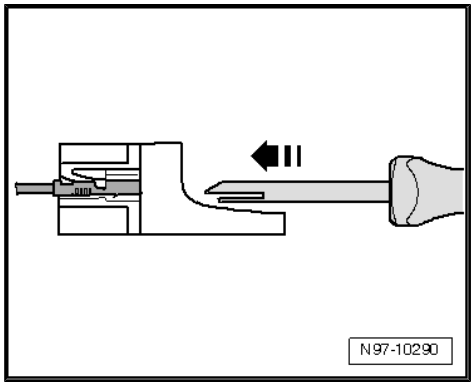

> ⚠ WARNING
>
> *Some tools are equipped with a tool safety device. This must be pushed over the tip of the tool after use in order to protect the tip and prevent personal injury.*

Releasing and dismantling contact housings ⇒ page 147 .

2.3.3 Assembly tools for single wire seals

The assembly tools serve as a means of sliding the single wire seals fully into the contact housing without damage and thereby assure complete sealing between single wire and contact housing.

Four assembly tools for single wire seals are included in each wiring harness repair set - VAS 1978 B- and previous versions.

Assembling single wire seals ⇒ page 144 .

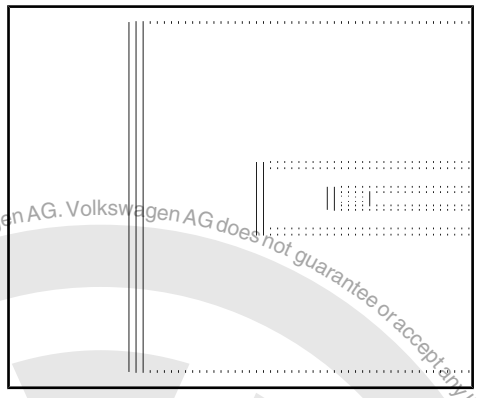

2.3.4 Wire stripper - VAS 1978/3-

Wire strippers - VAS 1978/3- serve as a means of stripping insulation off wires and cutting wires in the correct manner.

Wire strippers - VAS 1978/3- are included in wiring harness repair set - VAS 1978 B- and previous versions.

The wire strippers have an adjustable limit stop within the pliers jaws, with which the desired length of insulation to be removed can be adjusted.

Stripping:

– Adjust the sliding limit stop in the pliers jaws to the desired length of insulation to be removed.

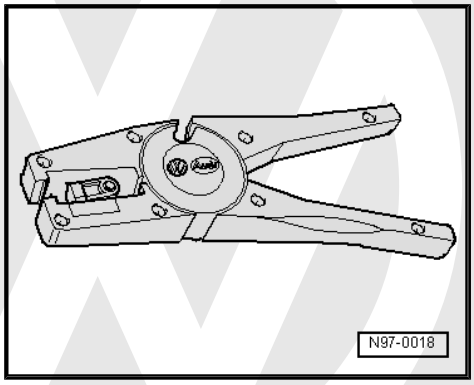

– Insert the end of the wire from the front fully into the pliers jaws and squeeze the pliers together completely.

– Open the pliers and removed the stripped wire end.

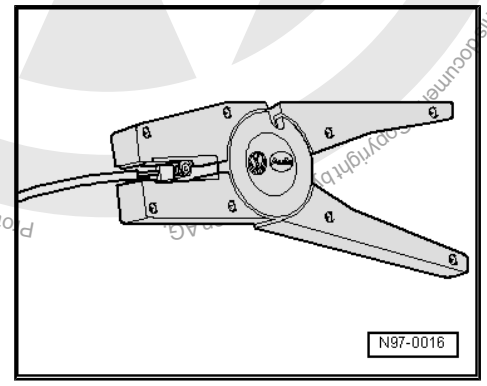

Protected by copyright. Copying for private or commercial purposes, in part or in whole, is not permitted unless authorised by Volkswagen AG. Volkswagen AG does not guarantee or accept any liability with respect to the correctness of information in this document. Copyright by Volkswagen AG.
satelettronica

– Cut the wire if necessary with the cutting part on the upper side of the wire strippers.

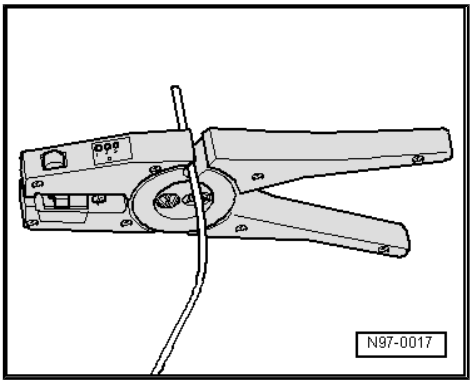

2.3.5 Hot air blower 220 V/50 Hz - VAS 1978/14-

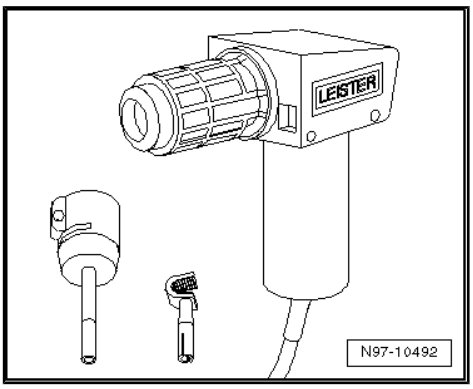

> **Caution**
>
> ***When shrink-fitting, take care not to damage any other wiring, plastic parts or insulating material with the hot air blower.***
>
> ***Observe the operating instructions of the hot air blower without fail!***

The hot air blower, 220 V / 50 Hz - VAS 1978/14- is used in conjunction with shrink element for hot air blower - VAS 1978/15- to shrink fit the crimp connectors. After crimping, the crimp connector has to be shrink fitted using the hot air blower in order to prevent any ingress of moisture.

Hot air blower, 220 V/50 Hz - VAS 1978/14- is included in wiring harness repair set - VAS 1978 B- and previous versions.

Shrink fitting crimp connectors using hot air blower, 220 V / 50 Hz - VAS 1978/14- ⇒ page 123 , or ⇒ page 124 .

2.3.6 Crimping pliers - VAS 1978/1A-

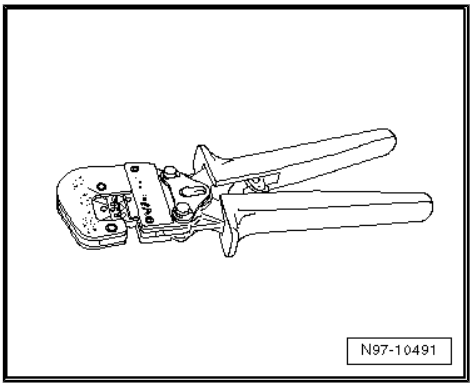

Crimping pliers - VAS 1978/1A- or crimping pliers (base tool) - VAS 1978/1-2- together with head adapter 0.35 - 2.5 mm² - VAS 1978/1-1- or head adapter 4.0 - 6.0 mm² - VAS 1978/2A- are used to squeeze together crimp connectors from the wiring harness repair sets.

Crimping connectors using crimping pliers - VAS 1978/1A- ⇒ page 124 .

The following heads adapters are available for crimping pliers (base tool) - VAS 1978/1-2- :

- Head adapter 0.35 mm^2 - 2.5 mm^2 - VAS 1978/1-1-
- Head adapter 4.0 mm^2 - 6.0 mm^2 - VAS 1978/2A-
- Head adapter for JPT contacts - VAS 1978/9-1-

In conjunction with head adapter for JPT contacts - VAS 1978/9-1- , the crimping pliers are used to crimp contacts to single wires during repairs to wiring with cross sections up to 0.35 mm^2 ⇒ page 110 .

Interchanging head adapter:

– Open up the crimping pliers fully.

satelettronica

– Unclip both locking pins -arrows- from the body of the crimping pliers.

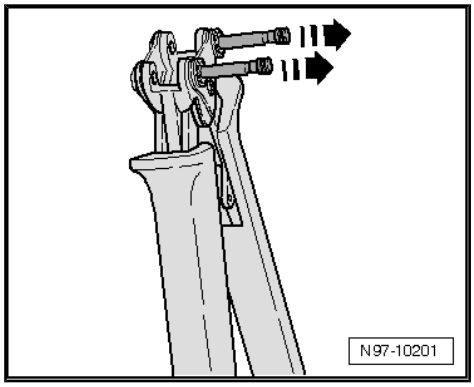

– Insert the required head adapter from above -arrow- in the body of the crimping pliers.

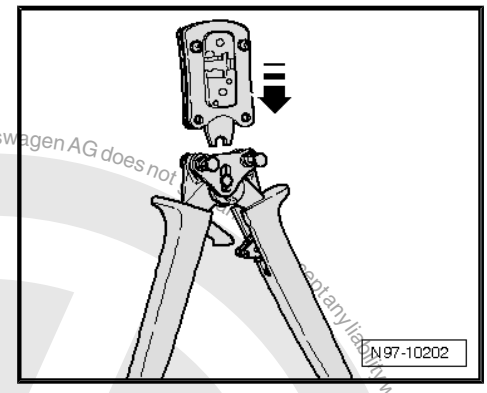

– Lock the head adapter by engaging the pins -arrows- in the body of the crimping pliers.

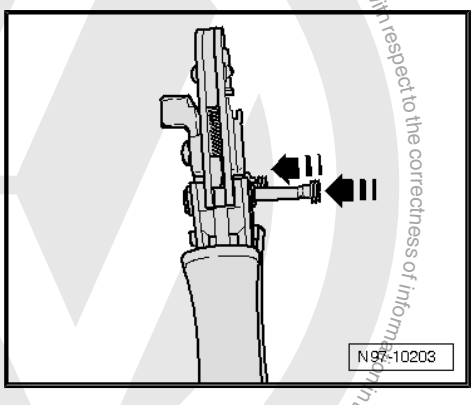

2.4 Repairs to wiring harnesses

Note

Observe the general notes on repairs to the vehicle electrical system
⇒ "2.1 General notes concerning repairs to vehicle electrical system", page 99 .

⇒ "2.4.1 Notes on repairs to airbag and belt tensioner wiring", page 107

⇒ "2.5 Repairs to fibre optic cables", page 126

⇒ "2.4.2 Repairing CAN bus wiring", page 109

⇒ "2.6 Repair of aerial wires", page 132

⇒ "2.4.3 Renewal of aerial wiring", page 109

⇒ "2.4.4 Repairing 0.13 mm2/0.35 mm2/0.5 mm2 wire", page 110

⇒ "2.4.7 Wiring open circuit with one repair position", page 123

Protected by copyright. Copying for private or commercial purposes, in part or in whole, is not permitted unless authorised by Volkswagen AG. Volkswagen AG does not accept any liability with respect to the correctness of information in this document. Copyright by Volkswagen AG.
satelettronica

⇒ “2.4.8 Wiring open circuit with two repair positions”, page 124

2.4.1 Notes on repairs to airbag and belt tensioner wiring

In addition to the general notes on repairs to wiring harnesses, the following instructions must be observed on how to repair wiring in airbag and belt tensioner systems:

WARNING

- *Airbag and seat belt tensioner can fail.*
- *Faulty repairs to the airbag and seat belt tensioning system can cause malfunctions in the passenger protection system.*
- *For repairs to airbag and belt tensioner wiring harnesses, only contacts, connectors and wiring designed specifically for this purpose may be used ⇒ Electronic Parts Catalogue (ETKA) .*

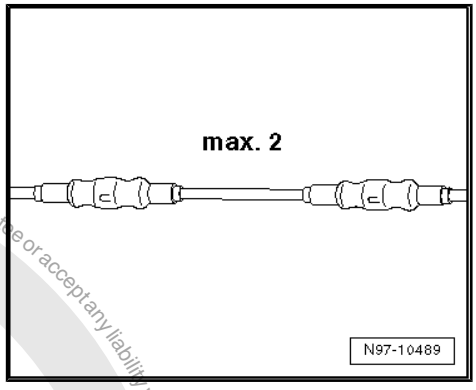

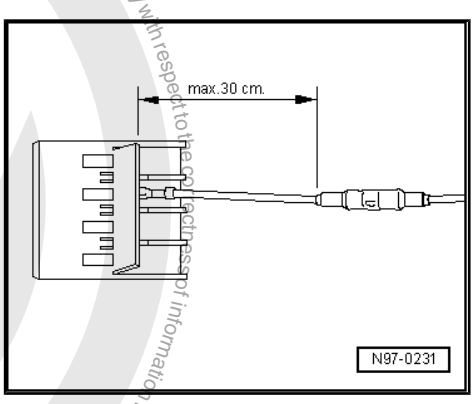

Protected by copyright. Copying for private or commercial purposes, in part or in whole, is not permitted unless authorised by Volkswagen AG. Volkswagen AG does not guarantee or accept any liability with respect to the correctness of information in this document. Copyright by Volkswagen AG.

satelettronica

Protected by copyright. Copyright by Volkswagen AG. Volkswagen AG does not guarantee or accept any liability with respect to the correctness of information in this document. Copyright by Volkswagen AG. Volkswagen AG, Volkswagen Aktiengesellschaft. Reproduction, distribution, or publication without permission is prohibited unless authorised by Volkswagen AG.

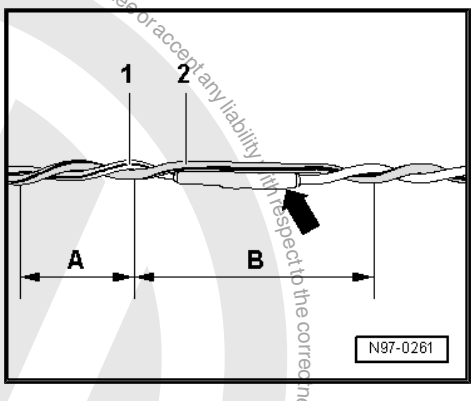

Note

- *Wires from airbag and belt tensioner wiring harness are only allowed to be repaired using the wiring harness repair set - VAS 1978 B- and previous versions.*
- *Observe the general notes on repairs to the vehicle electrical system ⇒ page 99 .*
- *Observe vehicle stickers indicating high voltage components. Before carrying out repairs, discharge residual voltage ⇒ General body repairs, interior; Rep. gr. 69 ; Occupant safety .*
- *For repairs to wiring in the airbag and belt tensioner system, a maximum of two positions may be repaired. The more the repairs there are in the wiring, the greater the resistance and this can trigger faults in the self-diagnosis of the system.*
- *To avoid corrosion, the crimp connectors are always to be shrink-fitted when performing airbag or belt tensioner wiring harness repairs.*
- *Do not incorporate the repaired wiring back in the vehicle's own wiring harness and mark the area of repair clearly with yellow insulating tape.*
- *Repairs in the area of the airbag or belt tensioner should not be more than 30 cm from the next contact housing. Together with the yellow insulating tape, this gives a clear indication of repairs that have already been carried out.*
- *In series production, the wires leading to the triggering units (airbags) are twisted with a length of lay of 20 mm ± 5 mm. This lay length is ensured in production by means of standard-part numbers for pairs of wires and must be adhered to under all circumstances when sections of twisted wires are repaired.*
- *During repairs, the wiring to the triggering units (airbags) must have the same length. When wires -1- and -2- are entwined, the twine spacing of A = 20 mm ± 5 must be adhered to without fail.*
- *There must not be any section of wiring, for example in the vicinity of crimp connectors -arrow-, longer than B = 100 mm with the wires not twisted.*

satelettronica

2.4.2 Repairing CAN bus wiring

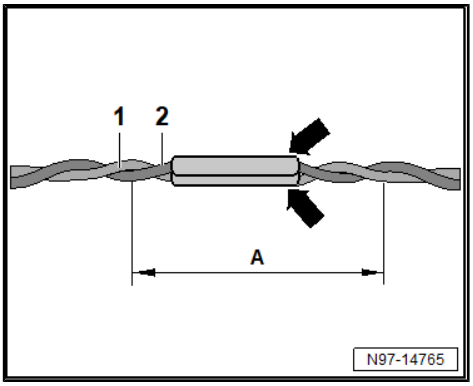

- Adhere to general instructions concerning repairs to vehicle electrical system ⇒ page 99 .
- An unshielded, twisted two-wire line -1- and -2- is used as a CAN bus wire.
- When repairs are performed, both CAN bus wires must have the same length.
- It is not permitted to repair the individual cores.
- Repairs to CAN bus wires must be carried out observing the correct cross section.
- For allocation, refer to ⇒ Electronic parts catalogue (ETKA) .
- The repair must not result in excess lengths.
- There must not be any section of wiring, for example in the vicinity of crimp connectors -arrow-, longer than -A- = 50 mm where the wires are not twisted.
- Mark the area of repair with yellow insulation tape to make it easy to identify.

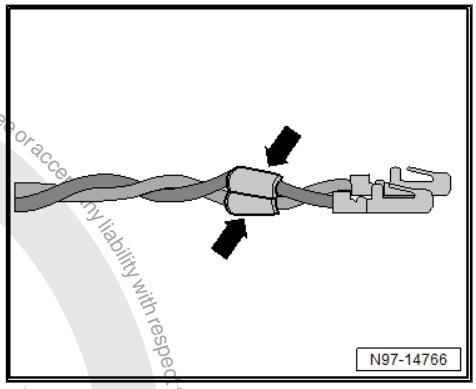

- The crimping of cable ends with connectors is to be carried out according to the same procedure.
- The repair areas -arrows- may be above one another.
- The colour codes of the CAN bus wiring can be gleaned from the following table:

Powertrain CAN, high wire	Orange/black
Convenience CAN, high wire	Orange/green
Infotainment CAN, high wire	Orange/violet
CAN low wire, (all)	orange/brown

2.4.3 Renewal of aerial wiring

A new approach to repair work on aerial wires has been developed ⇒ page 132 .

Now connecting wires in different lengths and various adapter cables are available as replacement parts instead of a complete aerial wire.

General description:

- Replacement parts can be found in the ⇒ Parts catalogue (ETKA): Special catalogue; Electrical connections; Genuine accessories; Subgroup 35 from illustration No. 035-20 .
- These genuine parts are suitable for all aerial wires and wire diameters which may need to be replaced.
- The connector housings for aerial wires are only available as genuine parts in one colour. However, they can be used for all colours of aerial connector.
- No provision has been made for replacement of individual aerial connectors in the event of repair.
- The wires can be used retroactively for all VW models, with all installed aerial wire diameters.
- All adapter and connection wires are suitable for all transmitter and receiver signals.
- This repair method can also be used for testing or retrofitting.

Protected by copyright. Copying for private or commercial purposes, in part or in whole, is not permitted unless authorised by Volkswagen AG. Volkswagen AG does not guarantee or accept any liability with respect to the correctness of information in this document. Copyright by Volkswagen AG.
satelettronica

Assembly overview of aerial cable:

Example: aerial wire between radio and aerial is defective. The following wires are required for the repair:

1 - Adapter cable, to radio connection. Length approx. 30 cm.

2 - Connecting wire, available in different lengths.

3 - Adapter cable, to aerial connection. Length approx. 30 cm.

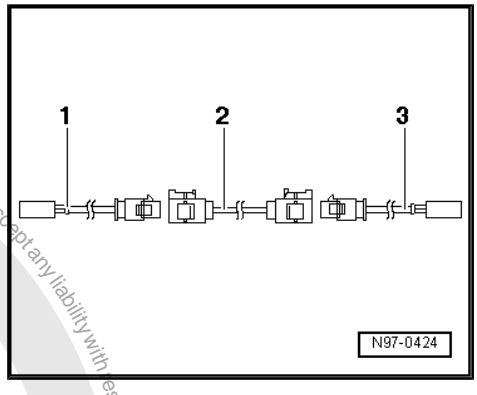

Installing a new aerial cable:

Note

Note that the total length of an aerial wire, depending on vehicle equipment level, can be divided into sections by aerial diversity control unit, traffic information control unit or aerial amplifier. Only the defective section of aerial wire must be replaced.

– Pull defective aerial wire connections off units.

– Determine the routing of the defective aerial wire in vehicle and measure the total length of the aerial connecting wire to be replaced.

The total length of aerial connecting wire is the sum of the length of adapter cables required -1- and -3- and the connecting wire -2-.

– To determine the length of connecting wire required, subtract 60 cm from the measured total length of aerial connecting wire -2-.

– Procure the required adapter cables -1- and -3- and connecting wire -2- at length calculated as genuine part from the Electronic parts catalogue (ETKA).

– Cut off connectors of defective aerial wire.

The remainder of the defective aerial wire remains in the vehicle.

– Connect adapter cables -1- and -3- to equipment in vehicle.

– Route and attach the connection line -2- in the immediate vicinity of the factory routing.

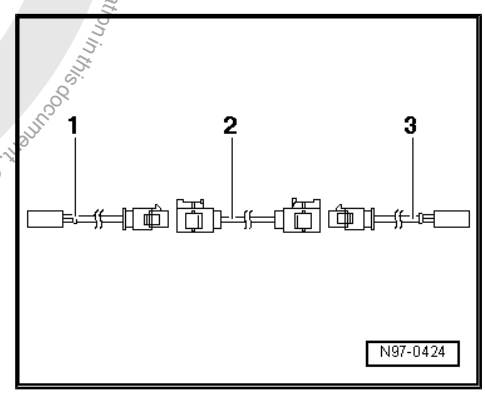

Note

Do not kink or excessively bend aerial wires! The bending radius must not be below 50 mm.

– Connect connecting wire to adapter cables.

– Perform functional test.

2.4.4 Repairing 0.13 mm²/0.35 mm²/0.5 mm² wire

Special tools and workshop equipment required

Volkswagen AG does not guarantee or accept any liability with respect to the correctness of information in this document. Copyright by Volkswagen AG.
Copyright. Copy, distribution, publication, modification, use for commercial purposes, in part or whole, is not permitted unless authorised by Volkswagen AG.
satelettronica

- Hot air blower - VAS 1978/14A- from wiring harness repair set - VAS 1978 B-

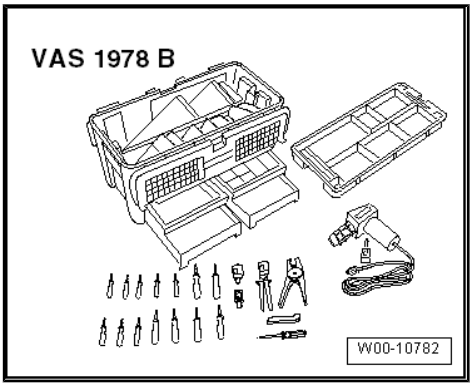

- Crimping pliers (body) - VAS 1978/1-2- from wiring harness repair set - VAS 1978 B-
- Adapter head 0.13 - 0.5 mm² - VAS 1978/1-3-

Note

Repair wires with a cross section of 0.35 mm² and 0.5 mm² are available for the repair.

Procedure

– Fit adapter head 0.13 - 0.5 mm² - VAS 1978/1-3- -1- on crimping pliers (body) - VAS 1978/1-2- as follows:

– Open crimping pliers -VAS 1978/1-2- .

– Pull out locking pins -2- in direction of -arrow A- as far as stop.

– Fit adapter head -VAS 1978/1-3- -1- centrally on crimping pliers -VAS 1978/1-2- in direction of -arrow B-.

– Insert locking pins -2- again as far as stop.

– Clear the wire to be repaired about 20 cm either side of the repair position.

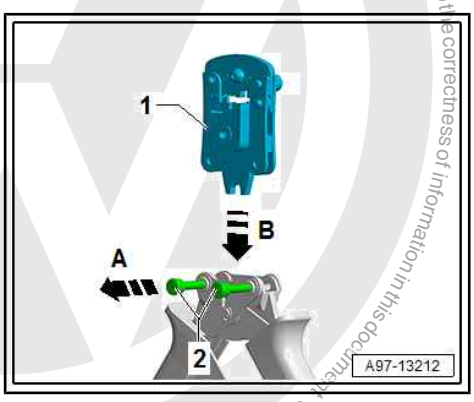

Caution

Risk of damage to electrical wiring.

- ***Carefully lay wrapped wiring harnesses aside.***

– If necessary, remove wrapping of wiring harness.

– Cut out the damaged piece of wiring using side cutters.

Note

- *If, after the damaged wire has been cut out, both ends of the vehicle's own wiring are too short for a repair using single butt connectors, use a piece of yellow repair wire of the appropriate length with two crimp connectors.*
- *When repairing a single wire with crimped/attached contact, lay the yellow repair wire next to the damaged single wire of the vehicle and cut to the required length.*

Protected by copyright. Copying for private or commercial purposes, in part or in whole, is not permitted unless authorised by Volkswagen AG. Volkswagen AG does not guarantee or accept any liability with respect to the correctness of information in this document. Copyright by Volkswagen AG.
satelettronica

– Fit end of wire -2- as far as stop -arrow- in receiver on adapter head -VAS 1978/1-3- -1- with appropriate cross section.

– Press together crimping pliers completely and hold in this position.

– Pull out end of wire -2- from adapter head -VAS 1978/1-3- -1- to strip insulation.

– Open crimping pliers again.

• Insulation must be cut cleanly and removed from the wire

• Do not leave any insulation on the stripped wires

• Single wires must not be damaged

– Choose a small transparent crimp connector from wiring harness repair set - VAS 1978/B- .

– For 0.13 mm^2 wires, also push a heat-shrink hose onto one of the wires ⇒ Electronic parts catalogue (ETKA) .

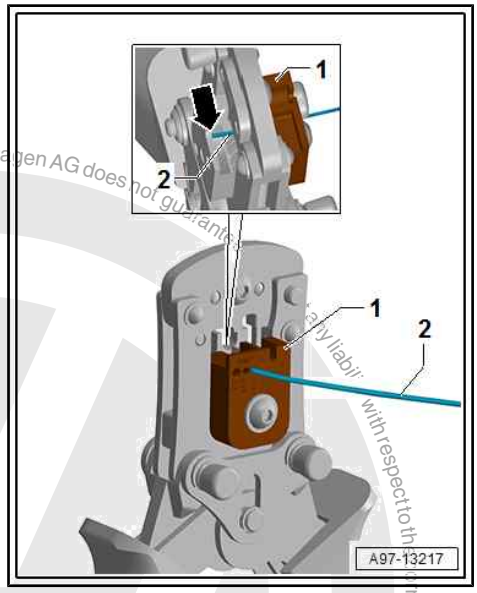

– Push crimp connector -2- in direction of -arrow A- as far as stop into crimp opening in adapter head -VAS 1978/1-3- .

– Push stripped wire -1- in direction of -arrow B- into crimp connector -2-.

• All single wires must be pushed into crimp connector -2-

• Insulation on wire -arrow C- must not be crimped.

– Press together crimping pliers completely and then open.

– Remove wire with crimp connector.

– Crimp wire with crimp connector on other side as described.

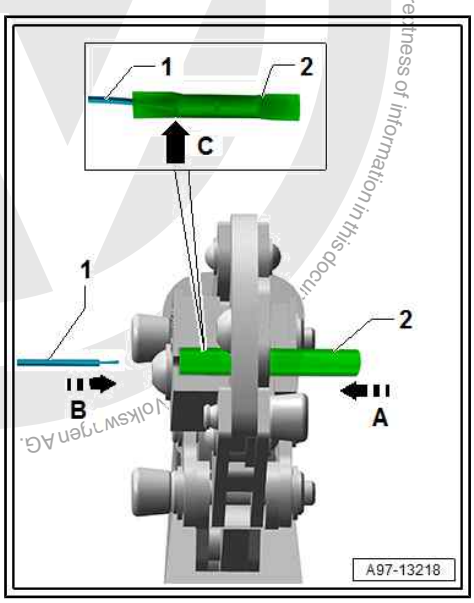

– Pull out locking pin -1- in direction of arrow -A- as far as it will go.

– Swivel upper part of adapter head -VAS 1978/1-3- -2- in direction of -arrow B-.

– Remove crimped crimp connector.

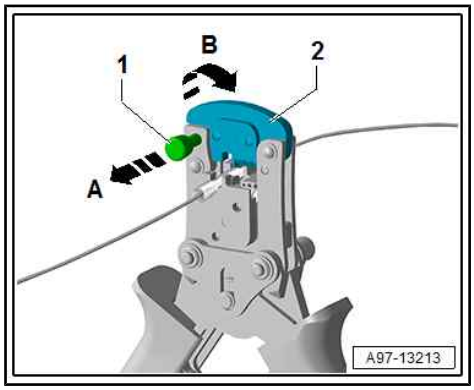

Protected by copyright. Copying for private or commercial purposes, in part or in whole, is not permitted unless authorised by Volkswagen AG. Volkswagen AG does not guarantee or accept any liability with respect to the correctness of information in this document. Copyright by Volkswagen AG.

satelettronica

Correct crimping result

– After crimping, the crimp connector has to be shrink fitted using the hot air blower in order to prevent any ingress of moisture.

• For 0.13 mm^2 wires, it is then necessary to shrink-fit the additional heat-shrink hose to ensure complete sealing.

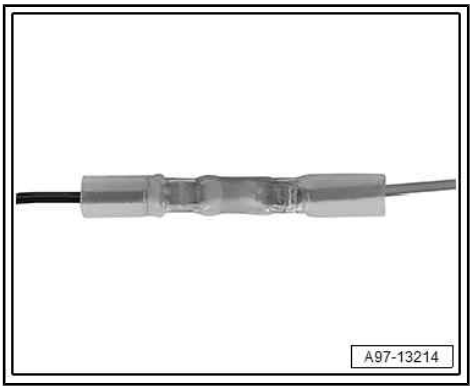

– Fit shrink element for hot air blower - VAS 1978/15A- onto hot air blower - VAS 1978/14A.-

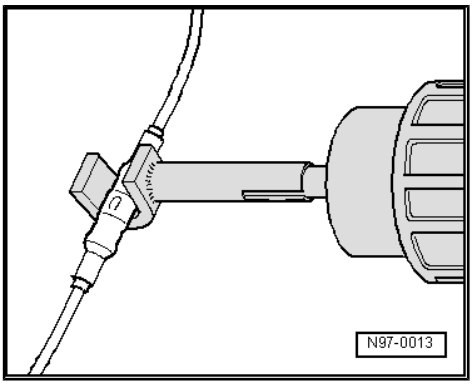

Caution

Risk of damage to electrical wiring.

- *When shrink-fitting the hose, take care not to damage any other wiring, plastic parts or insulating material with the hot nozzle of the hot air blower.*
- *Observe the operating instructions of the hot air blower without fail!*

– For 0.13 mm^2 wires, position heat-shrink hose -1- centrally over crimp connector -2- by feeling contours.

• Dimension -a- must be approximately even on both sides.

– Heat up heat-shrink hose/crimp connector using hot air blower along a straight line, working from centre outwards, until it is sealed completely and adhesive escapes from the ends.

• This is how the finished repair point should look -3-.

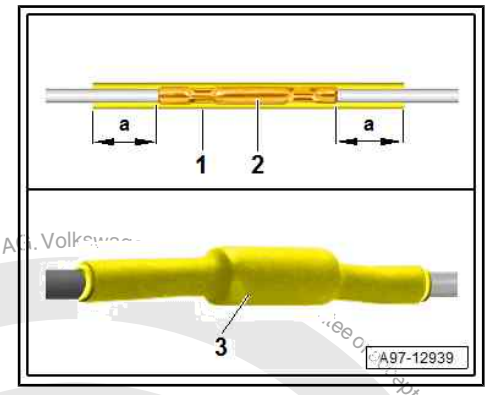

Note

- *Ensure that, where several wires have to be repaired, the crimp connectors are not directly adjacent to each other. To prevent the circumference of the wiring harness from becoming to great, position the crimp connectors so they are offset slightly.*
- *If the repair position was already wrapped, this section has to be wrapped again with yellow adhesive tape once the repair has been carried out.*
- *Attach the repaired wiring harness with a cable tie, if necessary, to prevent it from generating noise when the vehicle is in motion.*

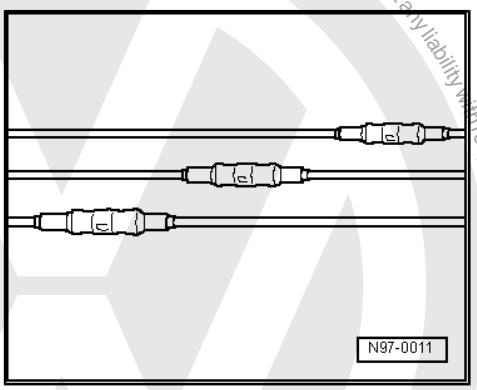

satelettronica
Protected by copyright. Copying for private or commercial purposes, in part or in whole, is not permitted unless authorised by Volkswagen AG. Volkswagen AG does not accept any liability with respect to the correctness of information in this document. Copyright by Volkswagen AG.

Premature release

– Push release lever -1- upwards in direction of -arrow A-.

– At same time, press together crimping pliers slightly and then open.

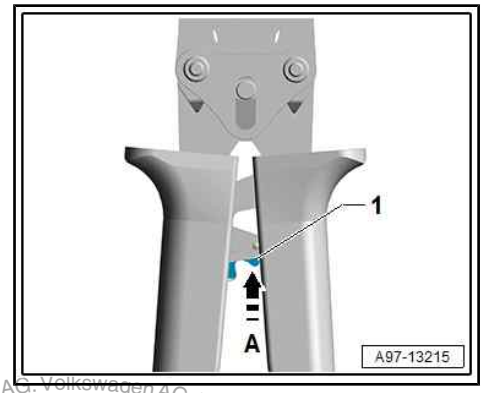

Caution

♦ *Do not use the crimp connector after premature release.*

2.4.5 Repair of 10 mm² or 16 mm² wire with single butt connector

Special tools and workshop equipment required

♦ Hot air blower - VAS 1978/14A- from wiring harness repair set - VAS 1978 B-

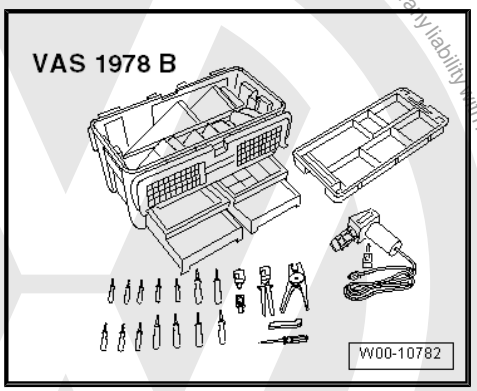

♦ Shrink element for hot air blower - VAS 1978/15A- from wiring harness repair set - VAS 1978 B-

♦ Wiring harness repair set - VAS 631 003-

Note

♦ *Repair wires (by the metre) with a cross section of 10 mm² or 16 mm² are available for the repair.*

♦ *Furthermore, single repair wires with a crimped/attached contact are available for repair work.*

Procedure

– Attach the crimping anvil and crimping stamp relevant to the wire thickness to the crimping pliers as follows:

– Open crimping pliers from wiring harness repair set - VAS 631 003- .

– Pull out locking pin -1- in direction of arrow -A- as far as it will go.

– Open adapter -2- in direction of arrow -B-.

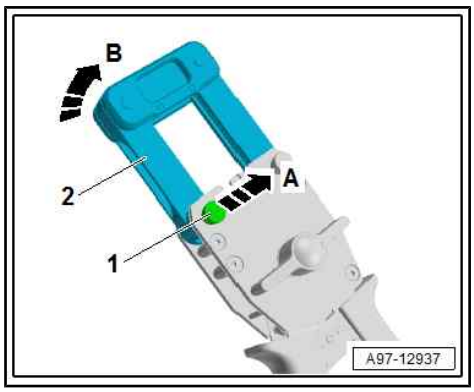

Protected by copyright. Copying for private or commercial purposes, in part or in whole, is not permitted unless authorised by Volkswagen AG. Volkswagen AG does not guarantee or accept any liability with respect to the correctness of information in this document. Copyright by Volkswagen AG.
satelettronica

– Insert crimping stamp -1- until it is heard to engage in mounting -2- on adapter -arrow A-.
– Insert crimping anvil -3- until it is heard to engage in mounting -4- of crimping pliers -arrow B-.

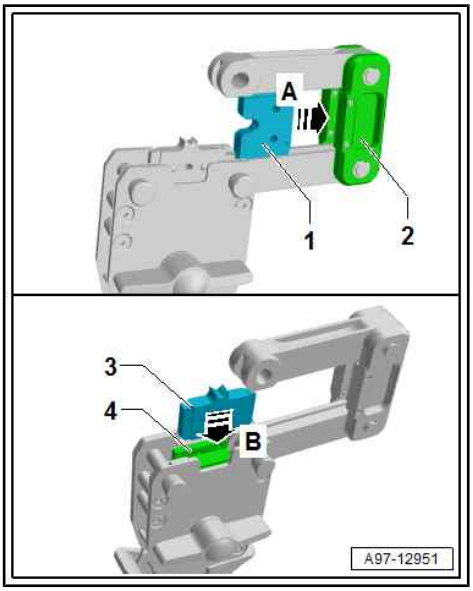

– Close adapter -1- in direction of arrow -A-.
– Insert locking pin -2- onto stop in direction of arrow -B-.
– Clear the wire to be repaired about 20 cm either side of the repair position.

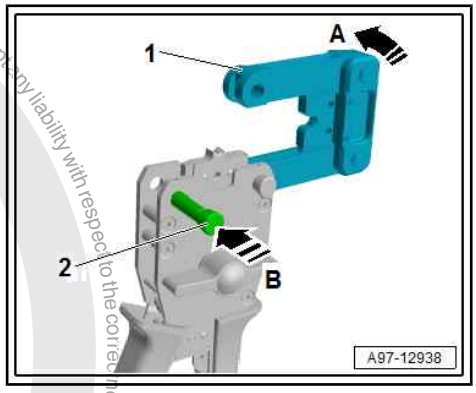

Caution

Risk of damage to electrical wiring.

♦ *Carefully lay wrapped wiring harnesses aside.*

– If necessary, cut through wrapping of wiring harness with a knife.
– Cut out damaged section of wire with wire stripper from wiring harness repair set - VAS 631 003- .

Note

♦ *If, after the damaged wire has been cut out, both ends of the vehicle's own wiring are too short for a repair using single butt connectors, use a piece of yellow repair wire of the appropriate length with two crimp connectors.*

♦ *When repairing a single wire with crimped/attached contact, lay the yellow repair wire next to the damaged single wire of the vehicle and cut to the required length.*

Copyright by Volkswagen AG. Volkswagen AG does not guarantee or accept any liability with respect to the correctness of information in this document. Copyright by Volkswagen AG. Volkswagen AG does not guarantee or accept any liability with respect to the correctness of information in this document. Copyright by Volkswagen AG. Volkswagen AG does not guarantee or accept any liability with respect to the correctness of information in this document. Copyright by Volkswagen AG. Volkswagen AG does not guarantee or accept any liability with respect to the correctness of information in this document.
satelettronica

– Set the adjustable stop in the wire stripper from wiring harness repair set - VAS 631 003- to the length that needs to be stripped.

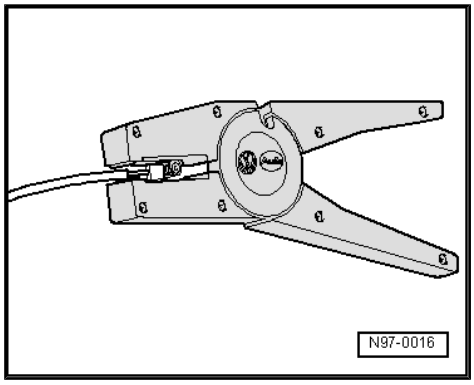

♦ 10 mm^2 wires: 14 mm

♦ 16 mm^2 wires: 16.5 mm

– Insert the end of the wire from the front fully into the pliers jaws and squeeze the pliers together completely.

– Open the pliers and removed the stripped wire end.

• Insulation must be cut cleanly and removed from the wire

• Do not leave any insulation on the stripped wires

• Single wires must not be damaged

– Use a suitable butt connector and heat-shrink hose from wiring harness repair set - VAS 631 003- to perform repair.

– Push heat-shrink hose onto one of the wires.

– Position butt connector -1- with first crimping point centrally on crimping anvil -2-.

• Dimension -a- must be even on both sides

– Turn quick-action lever -3- in anti-clockwise direction -arrow- until butt connector -1- is secure.

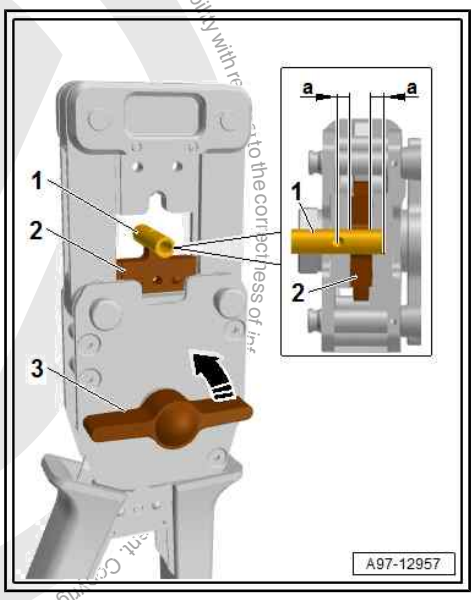

– Insert wire -2- with stripped end into butt connector -1- as far as stop -arrow-.

• All single wires must be pushed into the butt connector

– Close and open the crimping pliers several times until the crimping anvil moves downwards automatically to the start position.

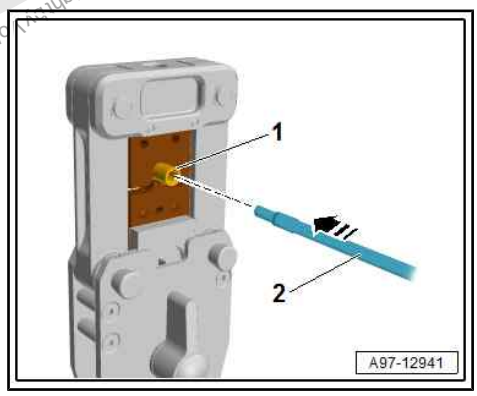

Note

The insulation on the wires must not be crimped.

– Crimping the wire with butt connector on the other side as described.

satelettronica

– Pull out locking pin in direction of arrow -A- as far as it will go.
– Open adapter in direction of arrow -B-.
– Remove crimped butt connector.

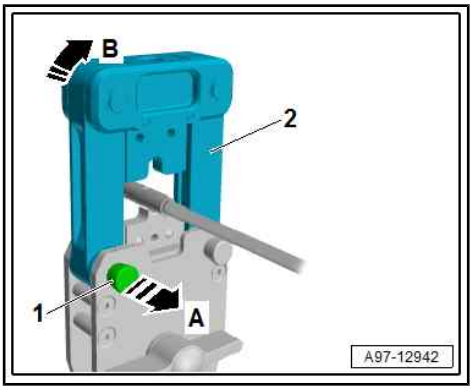

Correct crimping result

A - 10 mm^2, star crimp

B - 16 mm^2, B crimp

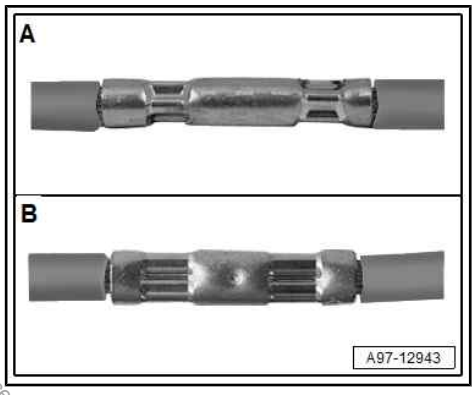

After crimping, the heat-shrink hose over the butt connector has to be shrink fitted using the hot air blower in order to prevent any ingress of moisture.

– Fit shrink element for hot air blower - VAS 1978/15A- onto hot air blower - VAS 1978/14A- .

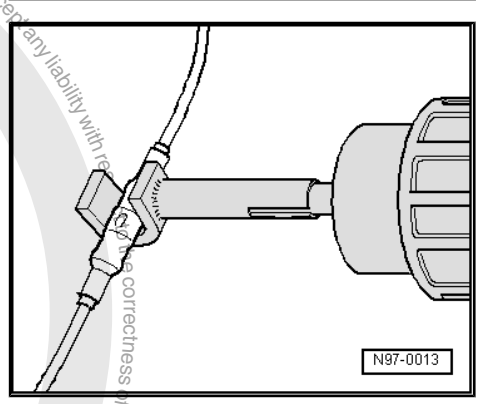

Caution

Risk of damaging adjacent components.

- ***When shrink-fitting the hose, take care not to damage any other wiring, plastic parts or insulating material with the hot nozzle of the hot air blower.***
- ***Observe the operating instructions of the hot air blower without fail!***

– Position heat-shrink hose -1- centrally over butt connector -2- by feeling contours.

• Dimension -a- must be roughly even on both sides

– Heat up heat-shrink hose using hot air blower along a straight line, working from centre outwards, until it is sealed completely and adhesive escapes from the ends.

• This is how the finished repair point should look -3-.

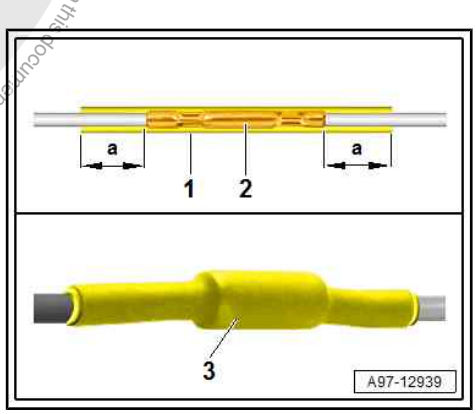

Copyright by Volkswagen AG. Volkswagen AG does not guarantee or accept any liability with respect to the correctness of information in this document. Copying for private or commercial purposes, in part or in whole, is not permitted unless authorised by Volkswagen AG.

satelettronica

Protected by copyright. Copying for private or commercial purposes, in part or in whole, is not permitted unless authorised by Volkswagen AG. Volkswagen AG does not guarantee or accept any liability with respect to the correctness of information

Note

- *Ensure that, where several wires have to be repaired, the butt connectors are not directly adjacent to each other. To prevent the circumference of the wiring harness from becoming too great, position the butt connectors so they are offset slightly.*
- *If the repair position was already wrapped, this section has to be wrapped again with yellow adhesive tape once the repair has been carried out.*
- *Attach the repaired wiring harness with a cable tie, if necessary, to prevent it from generating noise when the vehicle is in motion.*

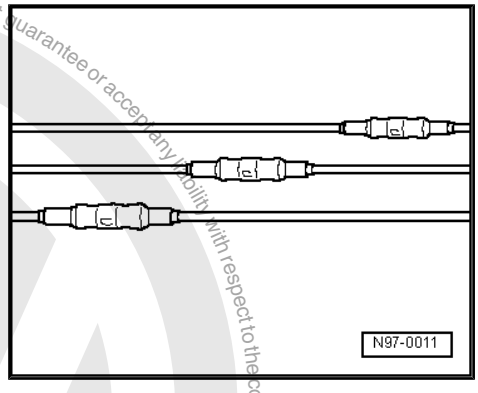

Premature release

– Push lever -1- downwards -arrow A-.

– Turn quick-action lever -2- in clockwise direction -arrow B- until crimping anvil is in the start position.

If premature release is not possible by hand:

– Push lever -1- downwards -arrow A-.

– Place wrench from wiring harness repair set - VAS 631 003- on bolt -3- on rear.

– Turn wrench in anti-clockwise direction -arrow C- until crimping anvil is in the start position.

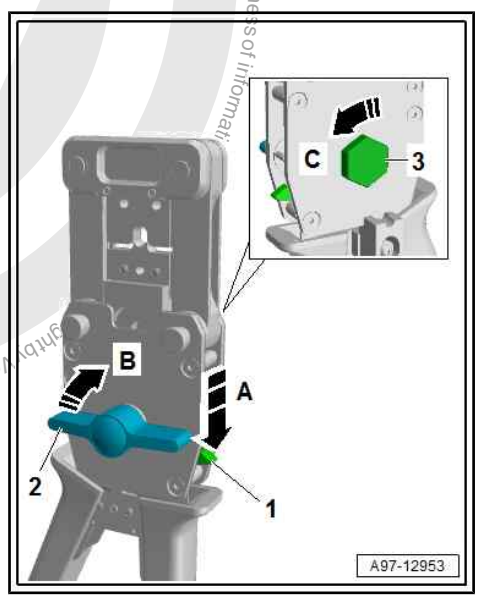

Caution

Do not use the butt connector after premature release.

2.4.6 Repair of 2.5 mm², 4 mm² or 6 mm² aluminium wire with single butt connector

Special tools and workshop equipment required

- Hot air blower - VAS 1978/14A- from wiring harness repair set - VAS 1978 B-

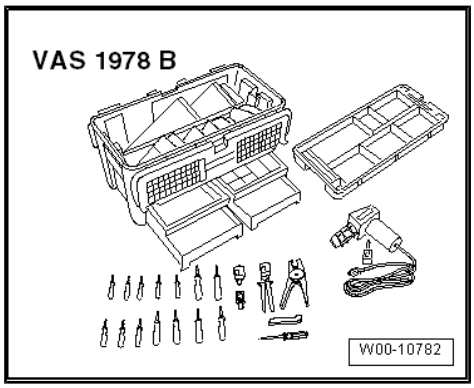

- Shrink element for hot air blower - VAS 1978/15A- from wiring harness repair set - VAS 1978 B-
- Wiring harness repair set - VAS 631 001-

satelettronica

Note

- *Copper repair wires (by the metre) with a cross section of 2.5 mm², 4 mm² or 6 mm² are available for repair.*
- *Furthermore, single copper repair wires with crimped contacts are available for repair work.*

Procedure

– Choose the crimping anvil, crimping stamp and contact positioner with contact locking mechanism relevant to the wire thickness and attach to the hand pliers as follows:

– Open hand pliers from wiring harness repair set - VAS 631 001- .

– Pull out locking pin -1- in direction of arrow -A- as far as it will go.

– Open support -2- in direction of arrow -B-.

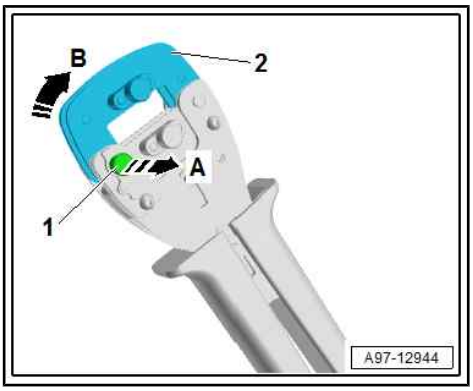

– Place crimping anvil -1- in hand pliers in such a way that crimping anvil -1- is flush with front of pliers.

– Secure crimping anvil with pins -2- -arrow A- and tighten knurled screw by hand.

– Insert crimping stamp -3- that corresponds with crimping anvil into support.

– Secure crimping stamp with pins -4- -arrow B- and tighten knurled screw by hand.

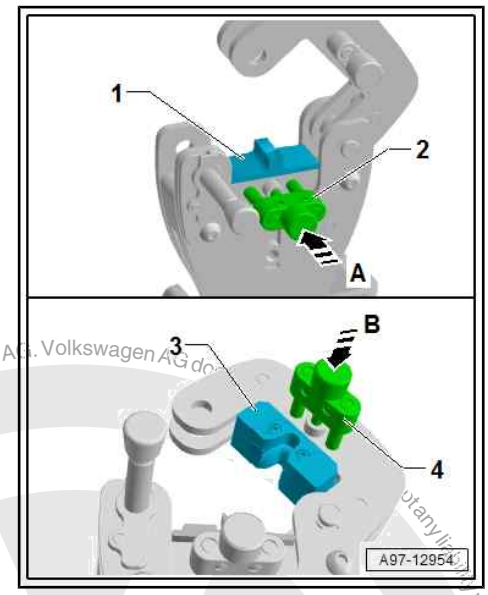

– Close adapter -1- in direction of arrow -A-.

– Insert locking pin -2- onto stop in direction of arrow -B-.

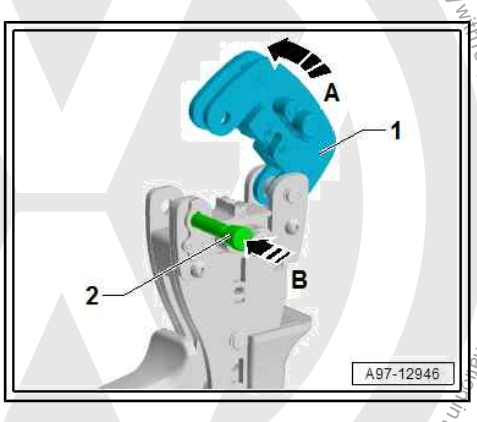

Protected by copyright. Copying for private or commercial purposes, in part or in whole, is not permitted unless authorised by Volkswagen AG. Volkswagen AG does not any liability with respect to the correctness of information in this document. Copyright by Volkswagen AG.
satelettronica

– Insert contact locking mechanism -1- in contact positioner -2-.

– Locate contact positioner with contact locking mechanism on hand pliers -5- and push hole in contact positioner -2- over knurled screw -4-.

– Screw in knurled screw -3- and tighten by hand.

– Clear the wire to be repaired about 20 cm either side of the repair position.

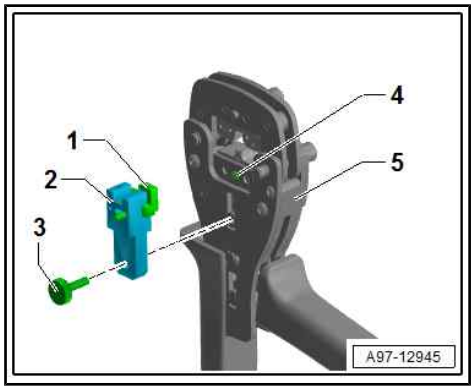

Caution

Risk of damage to electrical wiring.

- *Carefully lay wrapped wiring harnesses aside.*

– If necessary, cut through wrapping of wiring harness with a knife.

– Cut out damaged section of wire using wire stripper from wiring harness repair set - VAS 631 001- .

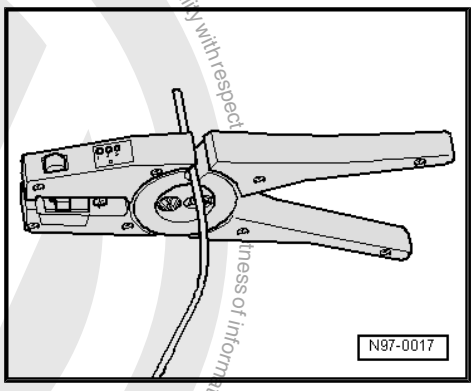

Note

If, after the damaged wire has been cut out, both ends of the vehicle's own wiring are too short for a repair using single butt connectors, use a piece of yellow copper repair wire of the appropriate length with two crimp connectors.

– Insert end of wire from front into matching adapter (relevant to wire thickness) in jaws of pliers as far as it will go.

– Squeeze pliers together completely.

– Open the pliers and removed the stripped wire end.

- Insulation must be cut cleanly and removed from the wire
- Do not leave any insulation on the stripped wires
- Single wires must not be damaged

– Use a suitable butt connector and heat-shrink hose from wiring harness repair set - VAS 631 001- to perform repair.

– Push heat-shrink hose onto one of the wires.

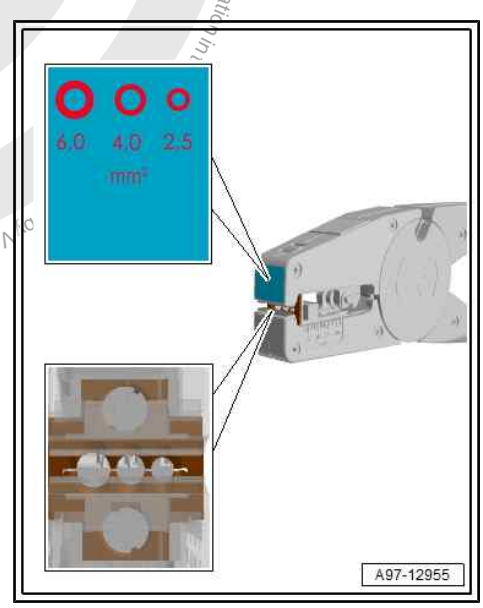

Protected copyright. Copyright by Volkswagen AG. Volkswagen AG does not guarantee or accept any liability with respect to the correctness of information in whole, in part or in whole, not permitted unless authorized by Volkswagen AG. Volkswagen AG does not guarantee or accept any liability with respect
satelettronica

– Insert butt connector -1- in contact positioner -2-.

• Butt connector -1- must be flush with contact positioner -2- -arrow A-

– Push contact locking mechanism -3- as far as stop in direction of arrow -B- and, in doing so, secure butt connector -1-.

• Lugs -4- on butt connector -1- must engage in groove -5- on contact locking mechanism -3-

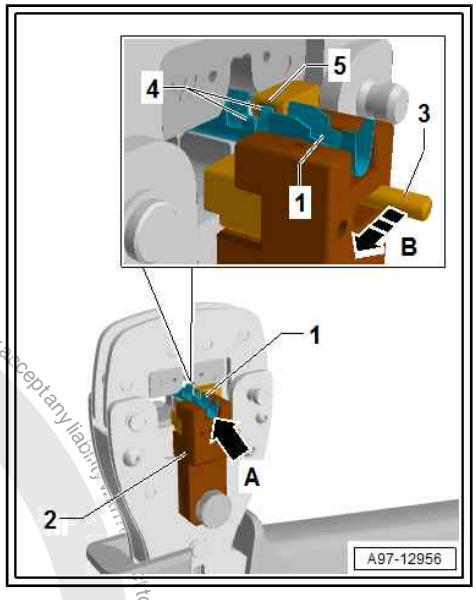

– Insert wire -2- with stripped end into butt connector -1- as far as stop -arrow-.

• All single wires must be pushed into the butt connector

• End of insulation should be no further than front edge of insulation crimp

– Close hand pliers until hand pliers open again automatically.

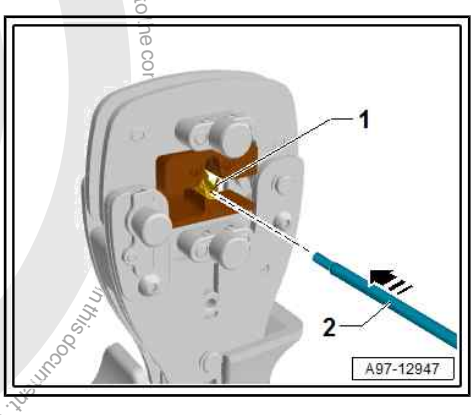

– Turn contact locking mechanism -2- onto stop in direction of -arrow-.

– Remove butt connector -1- from contact positioner -3-.

– Rotate hand pliers for 2nd crimping.

– Crimping the wire with butt connector on the other side as described.

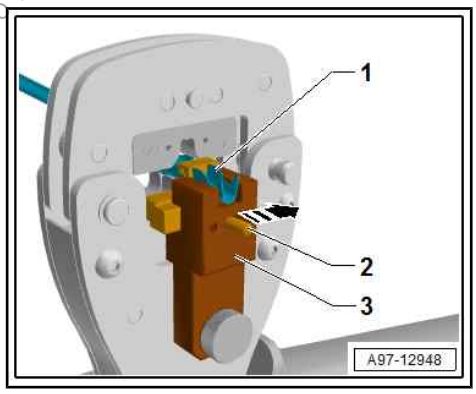

– Pull out locking pin -1- in direction of arrow -A- as far as it will go.

– Open support -2- in direction of arrow -B-.

– Remove crimped butt connector.

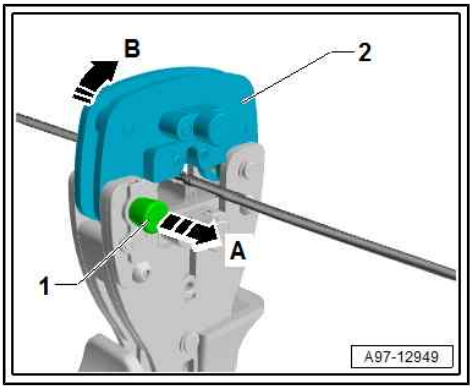

Protected by copyright. Copying for private or commercial purposes, in part or in whole, is not permitted unless authorised by Volkswagen AG. Volkswagen AG does not guarantee or accept any liability with respect to the correctness of information in this document. Copyright by Volkswagen AG.
satelettronica

Correct crimping result

- End of wire must protrude 0.1 mm … 1.0 mm at front edge of wire crimp, dimension -a-
- End of insulation must not be crimped with wire crimp
- Insulation should end no further than front edge of insulation crimp -arrows-

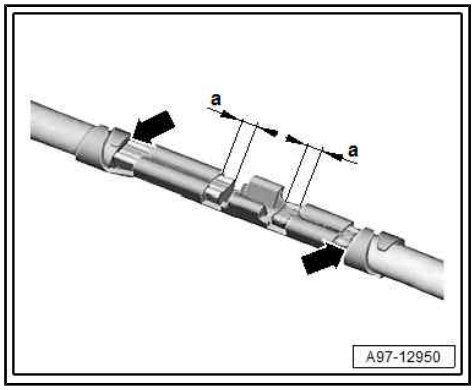

After crimping, the heat-shrink hose over the butt connector has to be shrink fitted using the hot air blower in order to prevent any ingress of moisture.

– Fit shrink element for hot air blower - VAS 1978/15A- onto hot air blower - VAS 1978/14A- .

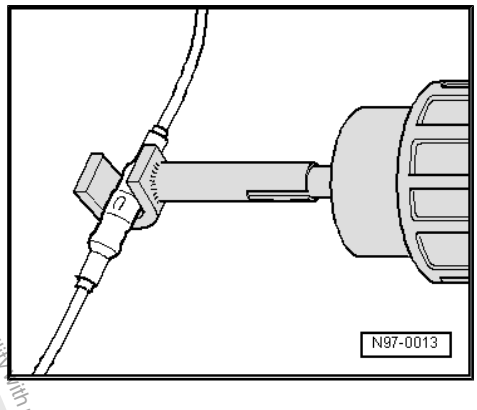

Caution

Risk of damaging adjacent components.

- ***When shrink-fitting the hose, take care not to damage any other wiring, plastic parts or insulating material with the hot nozzle of the hot air blower.***
- ***Observe the operating instructions of the hot air blower without fail!***

– Position heat-shrink hose -1- centrally over butt connector -2-.

- Dimension -a- must be roughly even on both sides

– Heat up heat-shrink hose using hot air blower along a straight line, working from centre outwards, until it is sealed completely and adhesive escapes from the ends.

- This is how the finished repair point should look -3-.

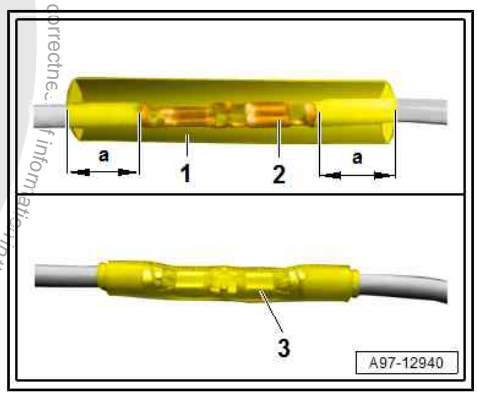

Note

- *Ensure that, where several wires have to be repaired, the butt connectors are not directly adjacent to each other. To prevent the circumference of the wiring harness from becoming too great, position the butt connectors so they are offset slightly.*
- *If the repair position was already wrapped, this section has to be wrapped again with yellow adhesive tape once the repair has been carried out.*
- *Attach the repaired wiring harness with a cable tie, if necessary, to prevent it from generating noise when the vehicle is in motion.*

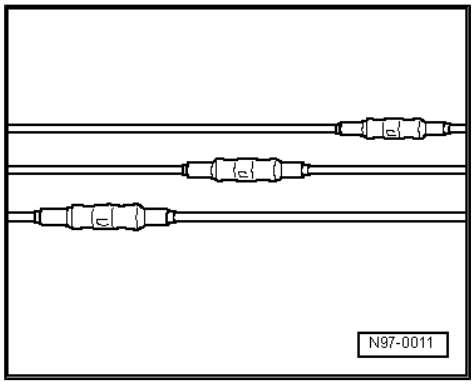

Protected by copyright. Copying for private or commercial purposes, in part or in whole, is not permitted unless authorised by Volkswagen AG. Volkswagen AG does not guarantee or accept any liability with respect to the correctness of information in this document. Copyright by Volkswagen AG.

satelettronica

2.4.7 Wiring open circuit with one repair position

Repair position with single crimp connector

– Place the wire to be repaired to one side (about 20 cm either side of the repair position).

– If necessary, unbind the wiring harness using the folding knife.

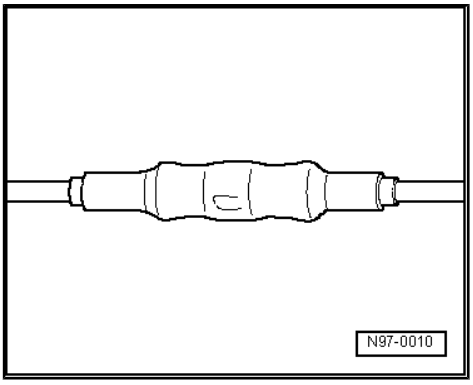

– Cut out the damaged piece of wiring using the wire strippers - VAS 1978/3- .

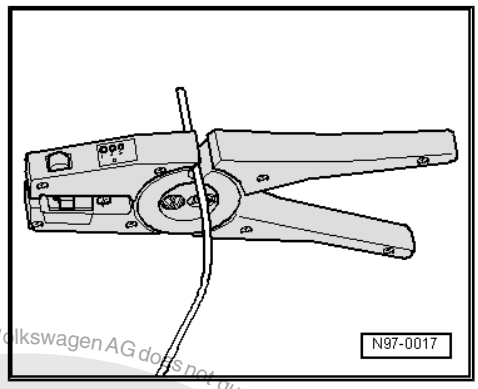

Note

If, after the damaged wire has been cut out, both ends of the vehicle's own wiring are too short for a repair using single crimp connectors, use a piece of repair wire of the appropriate length with two crimp connectors ⇒ page 124 .

– Strip the wire ends of insulation by 6 - 7 mm using the wire strippers.

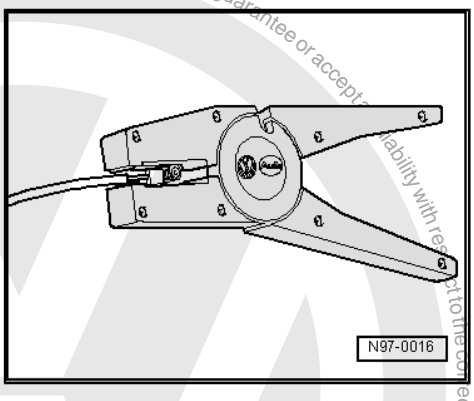

– Push the crimp connector on both stripped wire ends of the vehicle's own single wire and crimp it on using the crimping pliers.

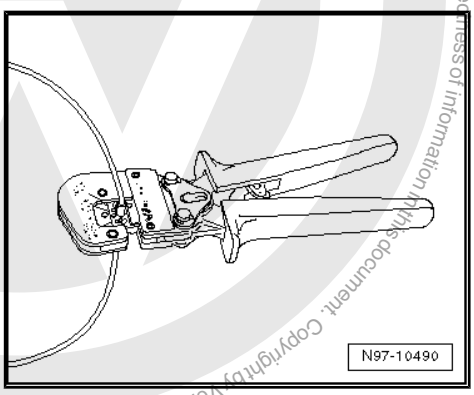

Note

- *Ensure without fail that the correct crimp recess is chosen for the crimp connectors being used* ⇒ page 103 .
- *The insulation on the wires must not be crimped.*

After crimping, the crimp connector has to be shrink fitted using the hot air blower in order to prevent any ingress of moisture.

– Place shrink element for hot air blower - VAS 1978/15- on hot air blower, 220 V / 50 Hz - VAS 1978/14- .

Protected by Volkswagen AG. Copyright or other IP rights, in part or in whole, is not permitted unless authorised by Volkswagen AG. Volkswagen AG does not guarantee or accept any liability with respect to the correctness of information in this document. Copyright by Volkswagen AG.
satelettronica

– Heat up the crimp connector using the hot air blower along a straight line, working from the middle outwards, until it is sealed completely and the adhesive escapes from the ends.

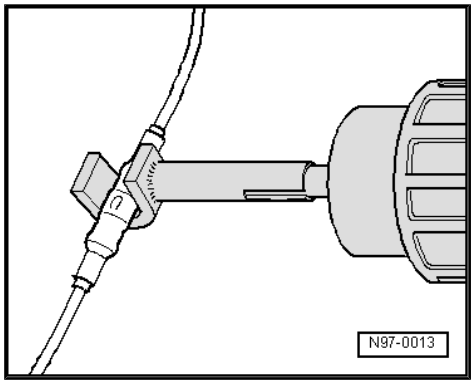

Caution

When shrink-fitting, take care not to damage any other wiring, plastic parts or insulating material with the hot air blower.

Observe the operating instructions of the hot air blower without fail!

Note

- *Ensure that, where several wires have to be repaired, the crimp connectors are not directly adjacent to each other. To prevent the circumference of the wiring harness from becoming to great, position the crimp connectors so they are offset slightly.*
- *If the repair position was already wrapped, this section has to be wrapped again with yellow insulation tape once the repair has been carried out.*
- *Attach the repaired wiring harness with a cable tie, if necessary, to prevent it from generating noise when the vehicle is in motion.*

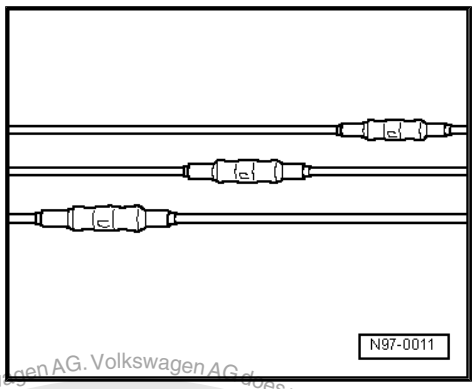

2.4.8 Wiring open circuit with two repair positions

Repair position with interlinked wire.

– Place the wire to be repaired to the side at two points (about 20 cm to both sides of the relevant repair position).

– If necessary, unbind the wiring harness using the folding knife.

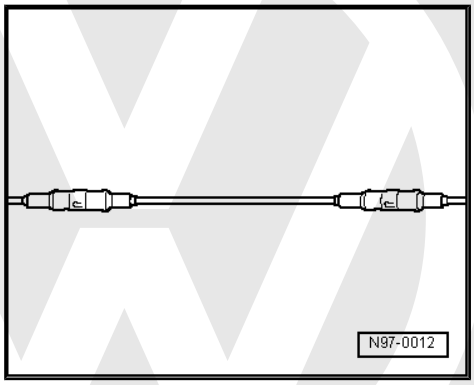

– Place the yellow repair wire next to the damage wiring harness and, using wire strippers - VAS 1978/3- , cut the repair wire to the required length.

– Cut the damaged section of wire out of the vehicle's own single wire.

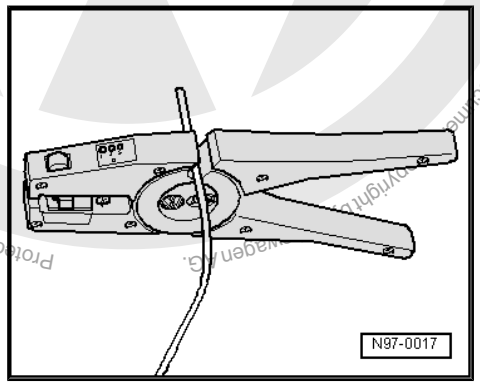

Protected by copyright. Copying for private or commercial purposes, in part or in whole is not permitted unless authorised by Volkswagen AG. Volkswagen AG does not guarantee or accept any liability with respect to the correctness of information in this document. Copyright by Volkswagen AG.
satelettronica

Protected by copyright. Copying for private or commercial purposes, in part or in whole, is not permitted unless authorised by Volkswagen AG. Volkswagen AG does not guarantee or accept any liability with respect to the correctness of information in this document. Copyright by Volkswagen AG.

– Strip the wire ends of insulation by 6 - 7 mm using the wire strippers.

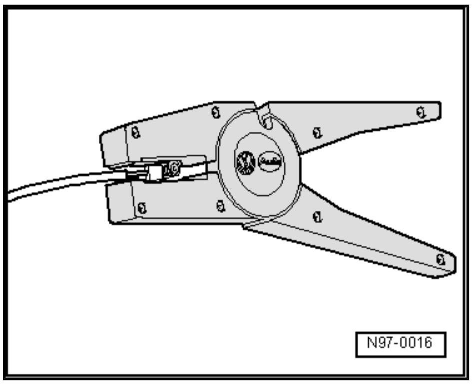

– Push the crimp connector onto one side of the vehicle's own single wire and on the other side onto the repair wire.

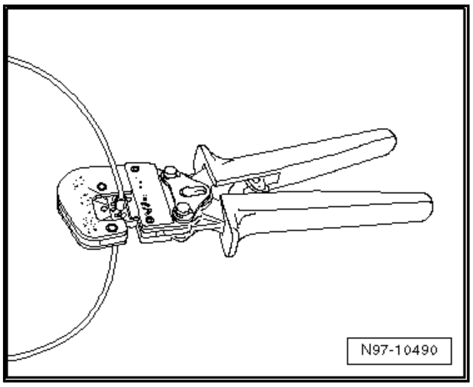

– Crimp the connector using the crimping pliers to both wire ends.

– Repeat this procedure on the other end of the repair wire.

Note

♦ *Ensure without fail that the correct crimp recess is chosen for the crimp connectors being used ⇒ page 103 .*

♦ *The insulation on the wires must not be crimped.*

After crimping, the crimp connector has to be shrink fitted using the hot air blower in order to prevent any ingress of moisture.

– Place shrink element for hot air blower - VAS 1978/15- on hot air blower, 220 V / 50 Hz - VAS 1978/14- .

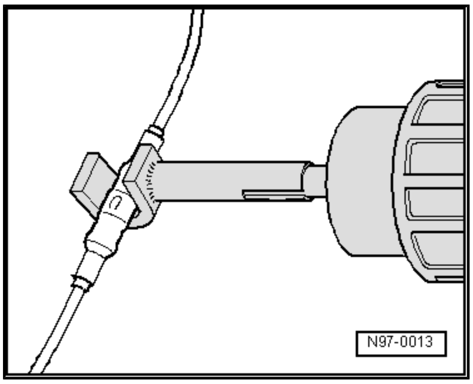

– Heat up the crimp connector using the hot air blower along a straight line, working from the middle outwards, until it is sealed completely and the adhesive escapes from the ends.

Caution

When shrink-fitting, take care not to damage any other wiring, plastic parts or insulating material with the hot air blower.

Observe the operating instructions of the hot air blower without fail!

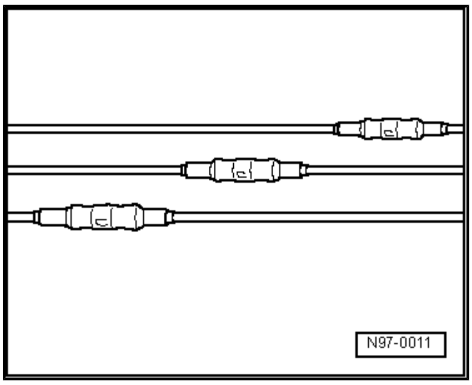

Note

♦ *Ensure that, where several wires have to be repaired, the crimp connectors are not directly adjacent to each other. To prevent the circumference of the wiring harness from becoming to great, position the crimp connectors so they are offset slightly.*

♦ *If the repair position was already wrapped, this section has to be wrapped again with yellow insulation tape once the repair has been carried out.*

♦ *Attach the repaired wiring harness with a cable tie, if necessary, to prevent it from generating noise when the vehicle is in motion.*

satelettronica

2.5 Repairs to fibre optic cables

It is very difficult to identify the exact location of the defect. Replace the damaged fibre optic cable by laying a new cable parallel to the defective fibre optic cable.

Note

- *Via the menu options of the vehicle diagnostic tester "Guided Fault Finding" or "Guided Functions", it is possible to ascertain the components between which the fibre optic cable has been damaged.*
- *The colour "yellow" indicates a fibre optic cable that has already been repaired.*

Procedure:

– Select "Guided functions" or "Guided fault finding" in the vehicle diagnostic tester ⇒ Vehicle diagnostic tester.

– Prepare fibre optic cable ⇒ page 126

Caution

Do not over-bend fibre optic cables. Minimum radius for bends is 25 mm.

Do not route fibre optic cables over sharp edges.

Make sure that the ends of the fibre optic cables are not dirty and do not touch them with your bare hands.

Do not expose fibre optic cables to heat.

It is not permissible to twist 2 fibre optic cables together or one fibre optic cable with a copper wire.

Protect connectors and connecting cables against dust. Use protective caps from the case.

2.5.1 Preparing fibre optic cable

Special tools and workshop equipment required

- Fibre optic cable repair kit - VAS 6223A-

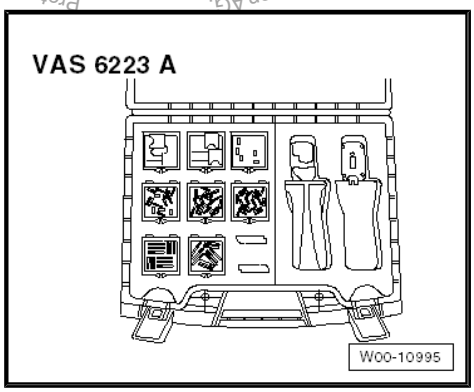

Protected by copyright. Copyright by Volkswagen AG. Volkswagen AG does not guarantee or accept any liability with respect to the correctness of information in this document. Copyright by Volkswagen AG. Copying for private or commercial purposes, in part or in whole, is not permitted unless authorised by Volkswagen AG.
satelettronica

- Cutting pliers - VAS 6228-

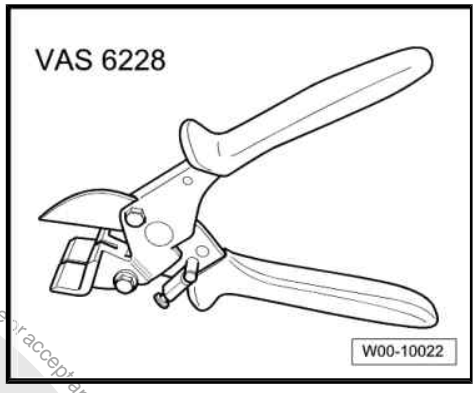

- Vehicle diagnostic tester

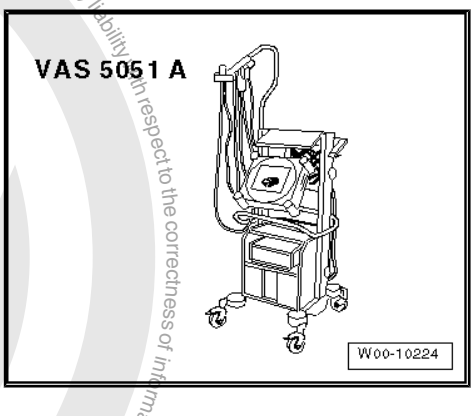

Protected by copyright. Copying for private or commercial purposes, in part or in whole, is not permitted unless authorised by Volkswagen AG. Volkswagen AG does not guarantee or accept any liability with respect to the correctness of information in this document. Copyright by Volkswagen AG.

Caution

Do not over-bend fibre optic cables. Minimum radius for bends is 25 mm.

Do not route fibre optic cables over sharp edges.

Make sure that the ends of fibre optic cables are not dirty and do not touch them with your bare hands.

Do not expose fibre optic cables to heat.

It is not permissible to twist 2 fibre optic cables together or one fibre optic cable with a copper wire.

Protect connectors and connecting cables against dust. Use protective caps from the case.

Fit tool adapter for fibre optic cable pliers - VAS 6223/1- .

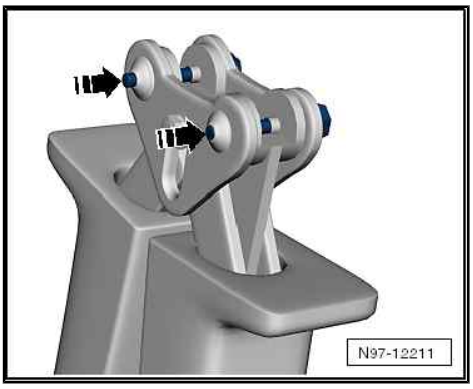

satelettronica

– Press locking pins -arrows- out.

– Fit tool adapter onto pliers -arrow- and press locking pins back in.

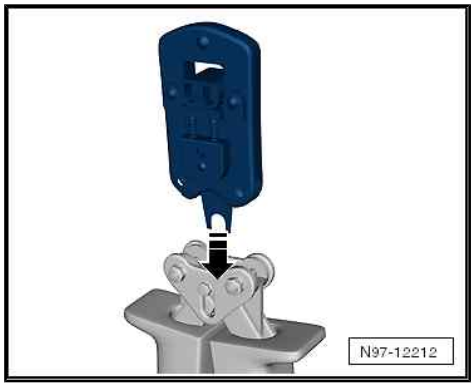

Cutting fibre optic cable to size.

– Determine required length of fibre optic cable.

– Open fibre optic cable pliers and insert length of fibre optic cable -1- to be cut.

– To cut the fibre optic cable to size, close fibre optic cable pliers .

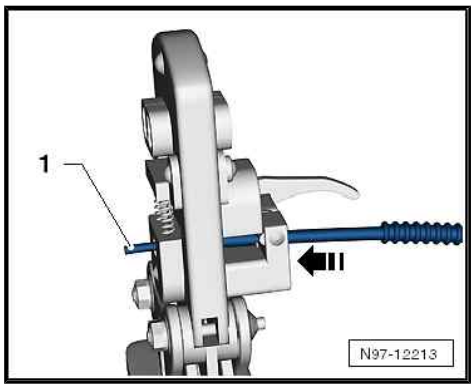

Stripping off insulation

– Open fibre optic cable pliers - VAS 6223/1- .

– Push down the stripping lever -arrow-.

– Insert fibre optic cable into the stripping hole.

• The fibre optic cable must be flush with the rear of the cutting pliers.

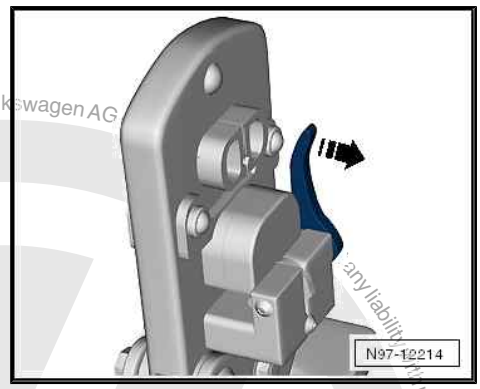

– Close fibre optic cable pliers as far possible and hold closed.

– Push the stripping lever upwards -arrow-, and remove fibre optic cable.

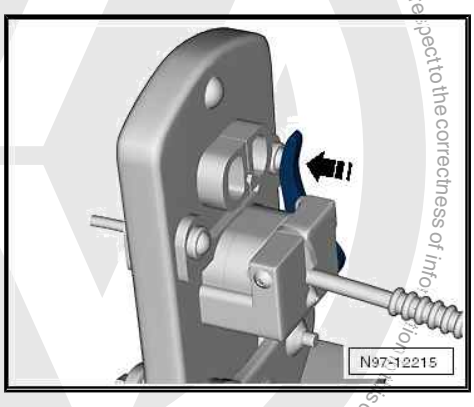

Protected by copyright. Copying for private or commercial purposes, in part or in whole, is not permitted unless authorised by Volkswagen AG. Volkswagen AG
Copyright by Volkswagen AG. ... any liability with respect to the correctness of information in this document.
satelettronica

Cut precisely (making a clean optic surface at end of cable).

– Insert fibre optic cable -1- into the cutting hole.

• The insulation must be lying against stop of cutting station.

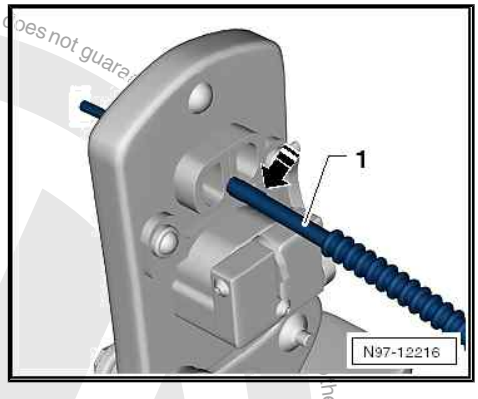

– Close fibre optic cable pliers - VAS 6223/1- and remove cable.

– Visually inspect cable-1- to make sure that it has been cut correctly and that there are no burrs on the cross-cut surface at end of cable.

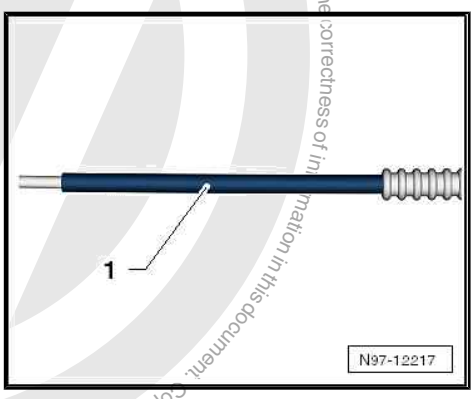

Note

♦ *Place the fibre optic cable only on surface or material that is absolutely clean or keep it in your hand.*

♦ *Use protective caps if there is a danger that the cross-cut surface at the ends of the fibre optic cable will be soiled.*

Fitting brass pin contact to fibre optic cable.

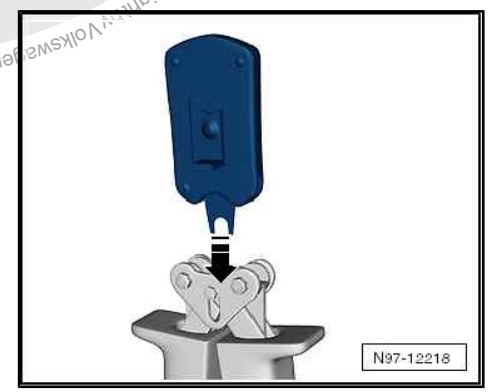

– Change tool adapter -arrow-.

– Move safety catch on fibre optic cable pliers -arrow- so that the word “Pin” can be seen.

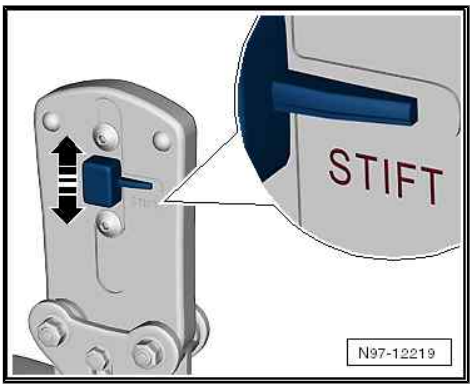

Protected by copyright. Copyright by Volkswagen AG. Volkswagen AG does not guarantee the correctness of information in this document. Copying for private or commercial purposes, in part or in whole, is not permitted unless authorised by Volkswagen AG.

satelettronica

– Insert a brass pin contact -1- into the hole.

– Close locking lever on fibre optic cable pliers -arrow-.

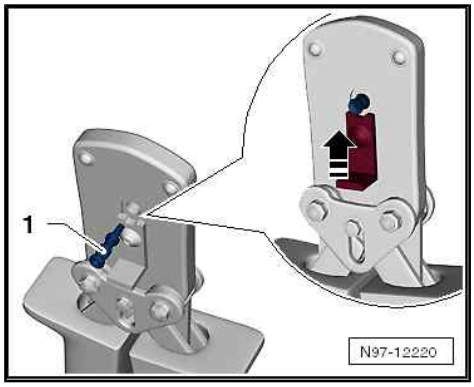

– Push fibre optic cable into brass pin contact -arrow- as far as spring-cushioned stop and close fibre optic cable pliers .

– Open fibre optic cable pliers and remove fibre optic cable together with brass pin contact.

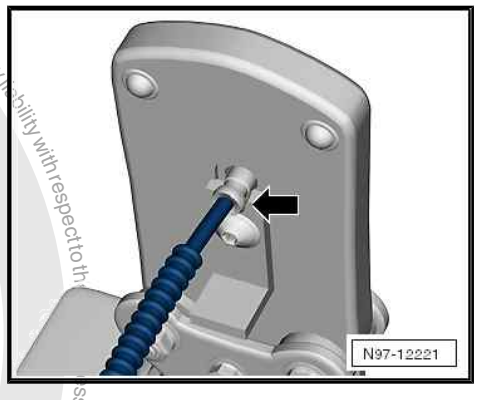

Caution

Do not kink or excessively bend fibre optic cables (min. bending radius: 25 mm).

– Check that the brass pin contact -2- is correctly attached to fibre optic cable -1-.

- 4 crimping points must be visible on the brass connecting pin.
- Make sure that the brass pin contact cannot be pulled off fibre optic cable by hand.
- The cross-cut end surface of the fibre optic cable is 0.01 ...0.1 mm behind the brass pin contact (visual inspection).

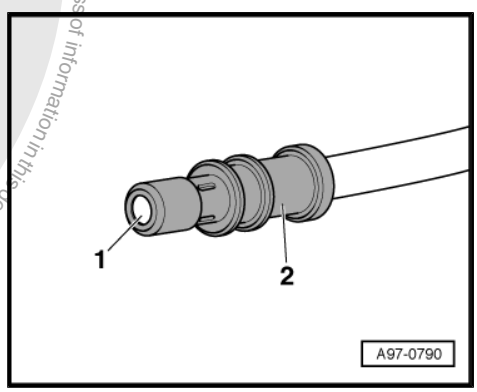

Note

- ♦ *There are push-on couplings that are used to connect fibre optic cables ⇒ Electronic Parts Catalogue .*
- ♦ *Installation of the new fibre optic cable in the cable harness connector* *⇒ page 131* .

Protected by copyright. Copyright by Volkswagen AG.
Copyright by Volkswagen AG. Volkswagen AG does not guarantee or accept any liability with respect to the correctness of information in this document.
Reproduction, in part or in whole, is prohibited unless authorised by Volkswagen AG.
Commercial purposes, in part or in whole, is prohibited unless authorised by Volkswagen AG.
satelettronica

Fitting corrugated tube onto fibre optic cable.

– Cut corrugated tube to a suitable length.

- Use cutting pliers - VAS 6228- or a sharp knife for cutting.
- Do not cut the corrugated tube with a paper cutter.
- The corrugated tube must be cut at a crest -arrow- not in a trough.
- When the corrugated tube is installed, it must engage audibly in the housing of the fibre optic cable.

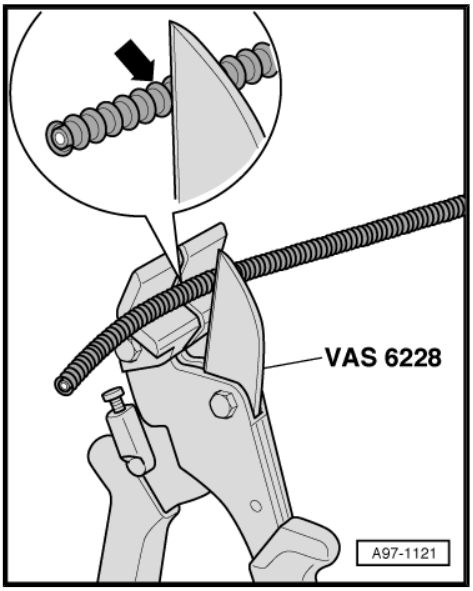

– Insert fibre optic cable into pliers for fitting the corrugated tube - VAS 6223/10- as shown in the illustration.

– Position pliers in place on the groove of the corrugated tube.

– Push pliers in groove along the circumference of the corrugated tube. This causes the fibre optic cable to be inserted in the corrugated tube.

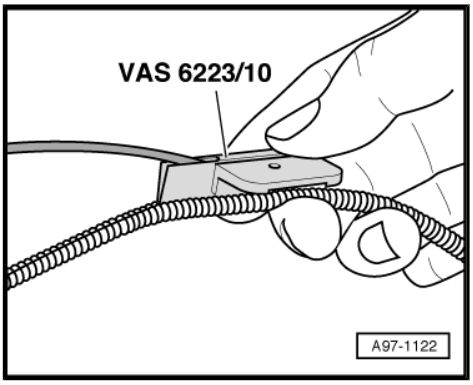

2.5.2 Detaching fibre optic cable from cable harness connector

Removing

– Pull fibre optic cable connector off the relevant control unit.

– Release the locking mechanism in fibre optic cable connector -1- by pressing it.

– Release secondary locking element -2-, using a small screwdriver.

– Remove fibre optic cable.

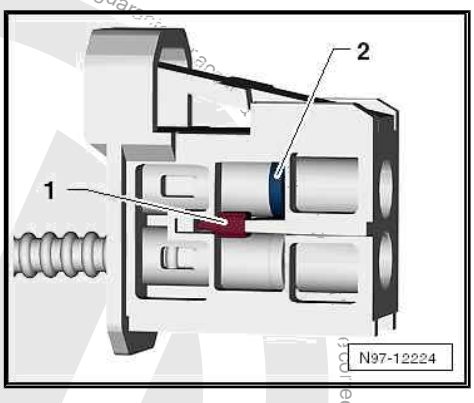

Caution

- *Use protective caps from the case in order to protect the fibre optic cable against dust and dirt.*
- *Use a new housing as the secondary locking element can be damaged when the fibre optic cable is removed.*
- *Take note of the arrows on the basic module for the assignment of "IN" and "OUT".*

Installing

Install in reverse order of removal, observing the following:

– Install fibre optic cable in accordance with markings.

satelettronica
Protected by copyright. Copyright by Volkswagen AG.
Copyright by Volkswagen AG. Volkswagen AG does not guarantee the correctness of information in this document. Copying for private or commercial purposes, in part or in whole, is not permitted unless authorised by Volkswagen AG.

Protected by copyright. Copying for private or commercial purposes, in part or in whole, is not permitted unless authorised by Volkswagen AG. Volkswagen AG does not guarantee or accept any liability with respect to the correctness of information in this document. Copyright by Volkswagen AG.

Note

- *Push corrugated tube into plug-in housing until it engages audibly.*
- *Seal the open plug-in connection -2- for fibre optic cable with the protective cap for cable harness connector - VAS 6223/9- -item 1-.*
- *The protective cap prevents soiling and mechanical damage at the cross-cut end of the fibre optic cable so that the transmission of light is not impaired.*

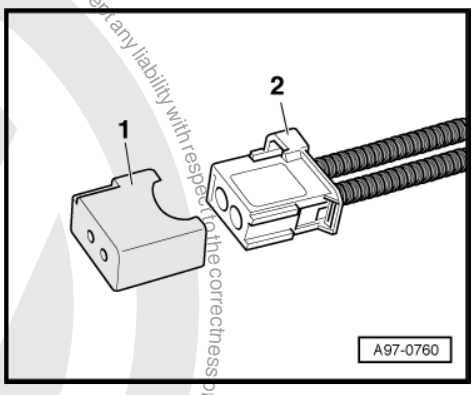

2.6 Repair of aerial wires

2.6.1 Repair set, aerial cable VAS 6720

Checking the aerial wire: ⇒ page 133

Changing tool adapter: ⇒ page 133

Cutting aerial wire: ⇒ page 133

Stripping shielding: ⇒ page 134

Stripping outer sleeve: ⇒ page 136

Stripping inner insulation: ⇒ page 137

Crimping inner conductor: ⇒ page 138

Crimping outer conductor: ⇒ page 140

Special tools and workshop equipment required

- Repair set, aerial cable - VAS 6720-

The repair set, aerial cable - VAS 6720- makes it possible to attain optimal repair quality in the repair of aerial wiring RG 174 (blue) and RKT 031 (black). The set includes the respective stripping tools and crimping tools for both aerial cables. In addition, the case includes all the separate parts needed to connect the Genuine plug in nearly production quality. In this case, only the 0-coded connector (green) is required. All other connecting wires for the various infotainment systems can be found in ETKA (EL-electrical connection elements) in plate 035-XX. These various adapter aerial wires are specific to vehicle models and must always be ordered separately. All the separate parts can be found in the above-named plate for reordering. The compartments of the case are labelled with the part numbers of the consumable materials. The repair set is based on the existing adapters and pliers system of the VAS 1978B.

Note

Additional information: ⇒ Operating manual, Repair set, aerial cable - VAS 6720-

satelettronica

Checking the aerial wire:

Before beginning repairs, determine which aerial wire is affected using the gauge.

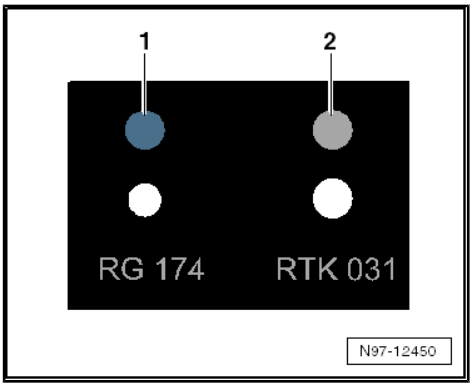

- ♦ -1- System RG 174 = blue
- ♦ -2- System RTK 031 = grey

In both systems, the positioner of the adapters is colour-coded accordingly.

Changing tool adapter:

- Select appropriate adapter according to check of aerial wire ⇒ page 133 .
- Open handles of pliers completely.
- Release the two locking pins -arrows- from handles of pliers and pull them out.

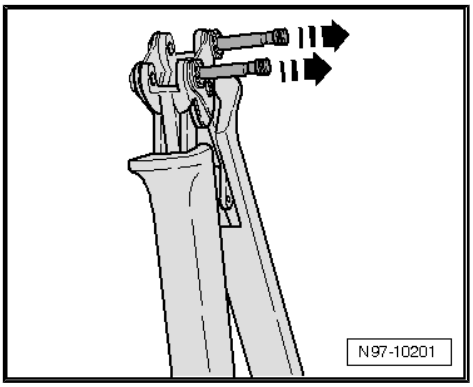

- Insert required tool adapter from above -arrow- into handles of pliers.

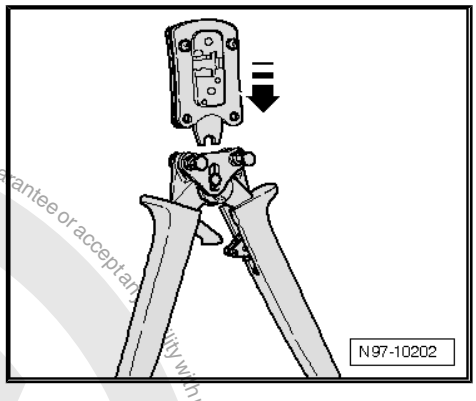

- Lock adapter into handles of pliers by pressing in pins -arrows-.

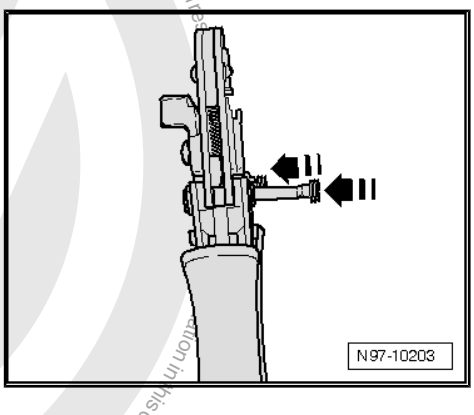

Cutting aerial wire:

Protected by copyright. Copying for private or commercial purposes, in part or in whole, is not permitted unless authorised by Volkswagen AG. Volkswagen AG does not guarantee or accept any liability with respect to the correctness of information in this document. Copyright by Volkswagen AG.

satelettronica

– Push aerial wire -2- into cutting mechanism -1-.
– Close tool and open it again.
– Pull aerial wire out of cutting mechanism.

Stripping shielding:

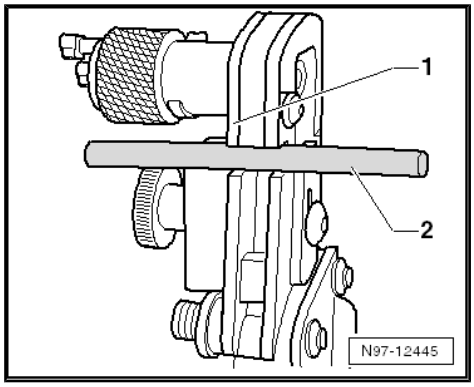

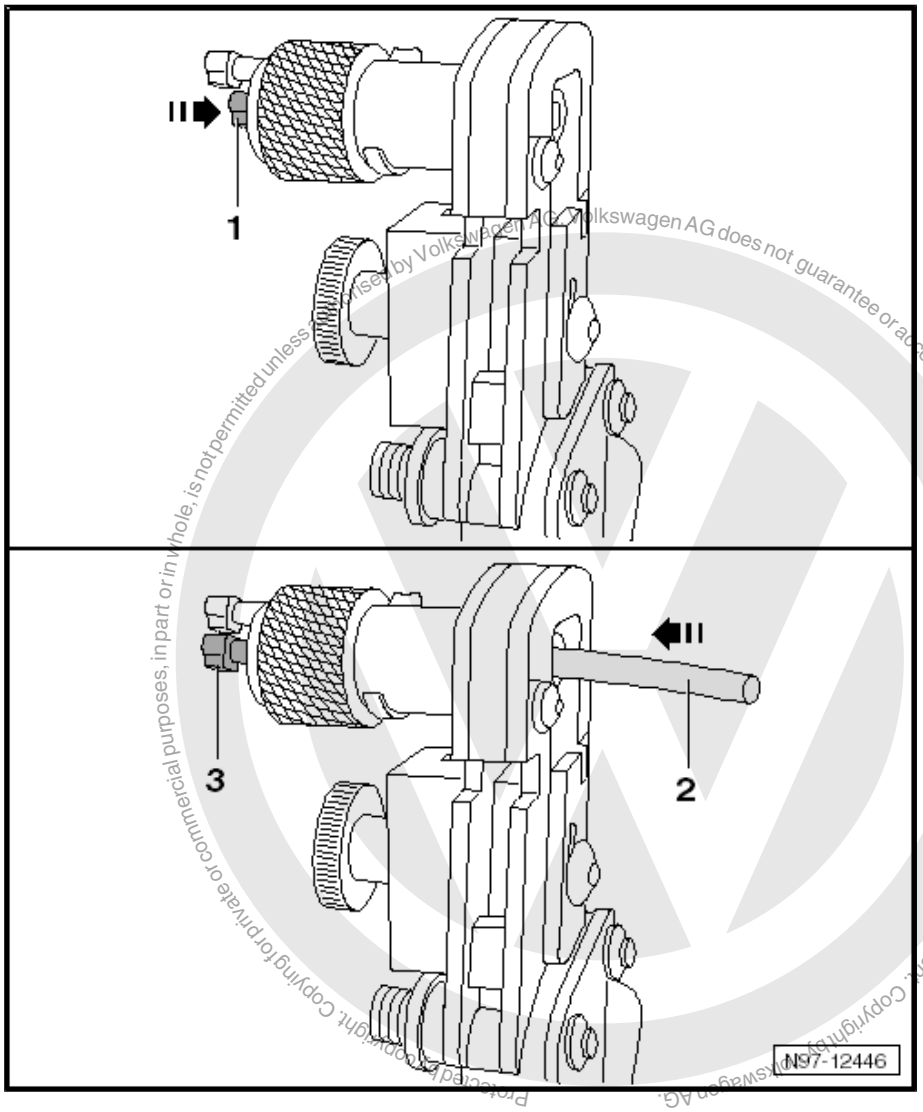

– Push locating pin -1- into rotary cutter to stop.
– Push aerial wire -2- into rotary cutter to stop. The locating pin -3- is again entirely visible.

satelettronica

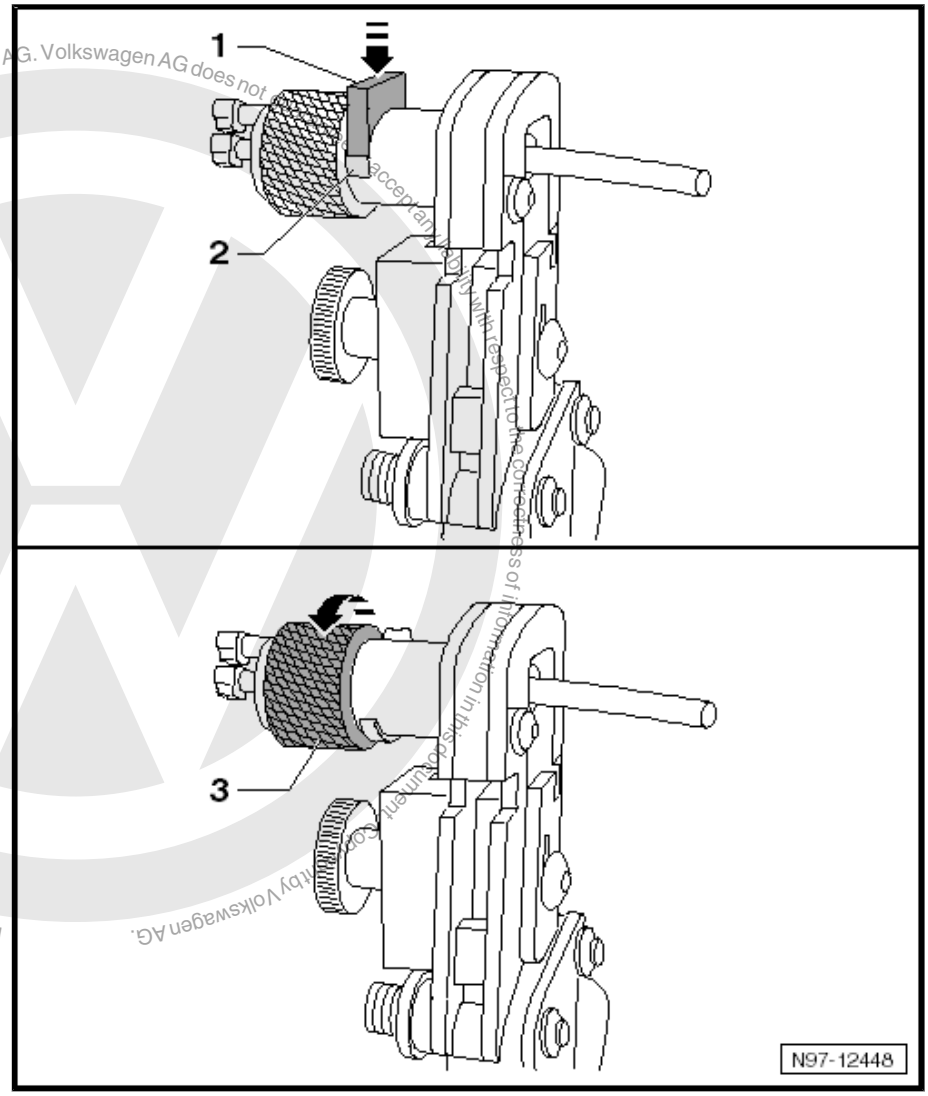

Protected by copyright. Copying for private or commercial purposes, in part or in whole, is not permitted unless authorised by Volkswagen AG. Volkswagen AG does not accept any liability with respect to the correctness of information in this document. Copyright by Volkswagen AG.

satelettronica

- Push blade holder -1- against shaft of rotary cutter until it engages. The gap -2- beneath the blade holder is completely closed.
- Hold aerial wire securely so that it cannot turn.
- Turn rotary cutter -3- approximately 2 times in direction of arrow until it rotates easily.

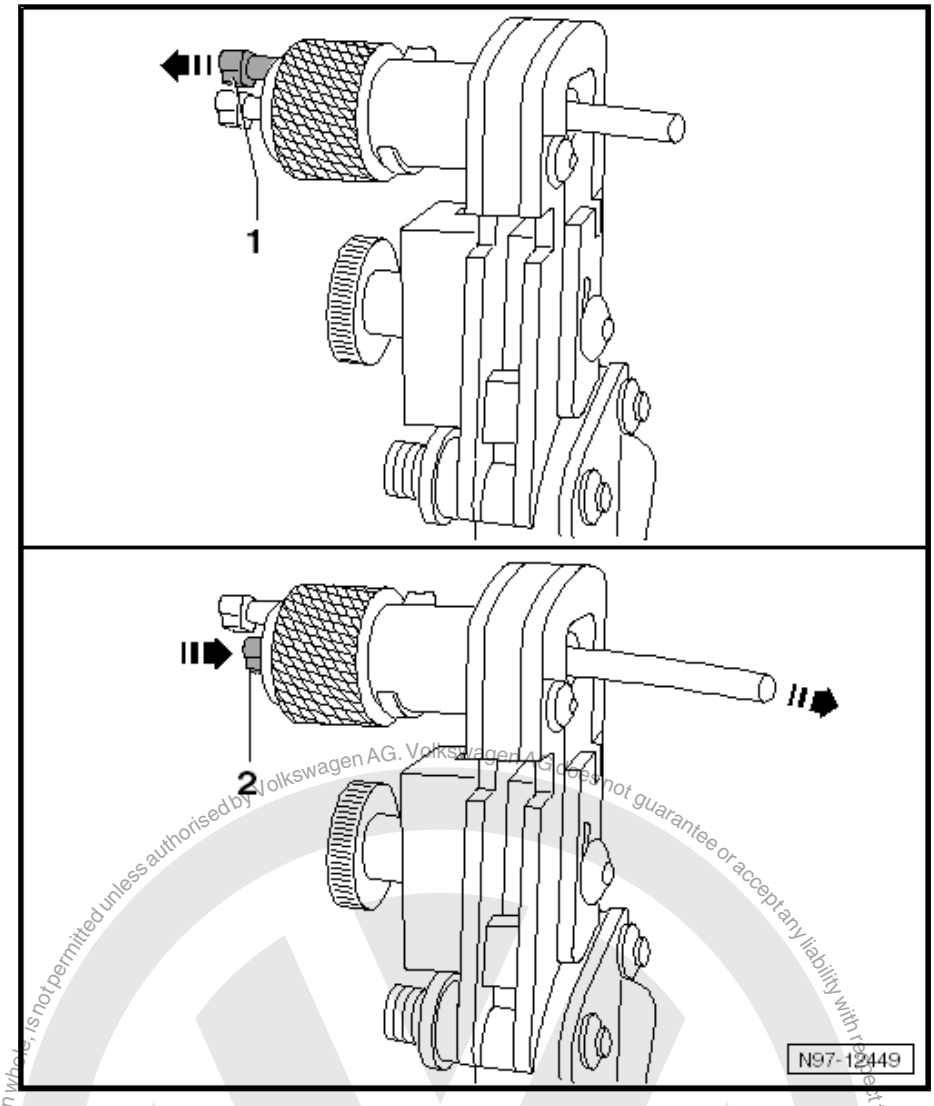

- Pull release pin -1-. The blade holder is released and separates from aerial wire.
- Push locating pin -2- into rotary cutter to stop. The aerial wire is pressed out of rotary cutter.
- Remove shielding from aerial wire.
- Remove remnants of insulation from rotary cutter.

Stripping outer sleeve:

Protected by copyright. Copying for private or commercial purposes, in part or in whole, is not permitted unless authorised by Volkswagen AG. Volkswagen AG does not guarantee or accept any liability with respect to the correctness of information in this document. Copyright by Volkswagen AG.
satelettronica

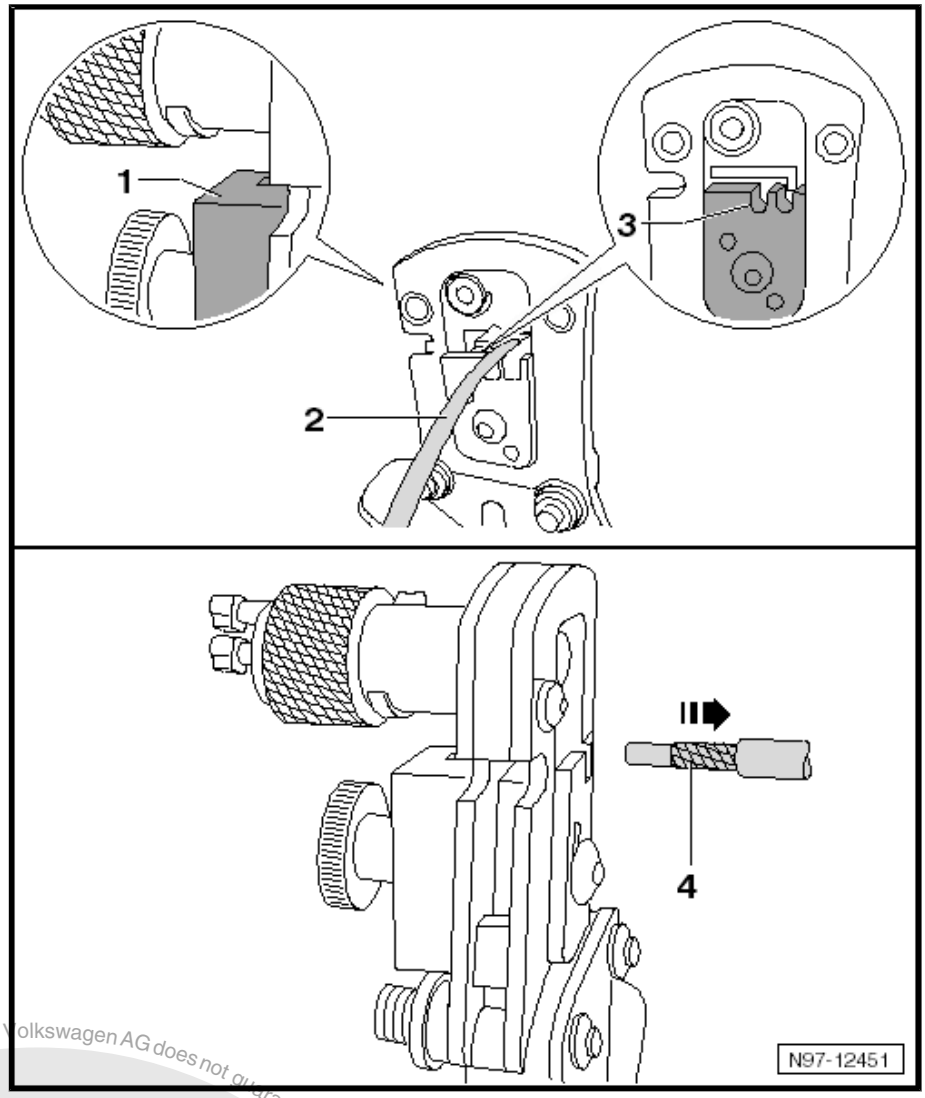

– Push aerial wire -2- through notch -3- into tool adapter to stop -1-.
– Close tool and open it again.
– Pull out aerial wire -4-.

Stripping inner insulation:

satelettronica
Protected by copyright. Copying for private or commercial purposes, in part or in whole, is not permitted unless authorised by Volkswagen AG. Volkswagen AG does not guarantee or accept any liability with respect to the correctness of information in this document. Copyright by Volkswagen AG.

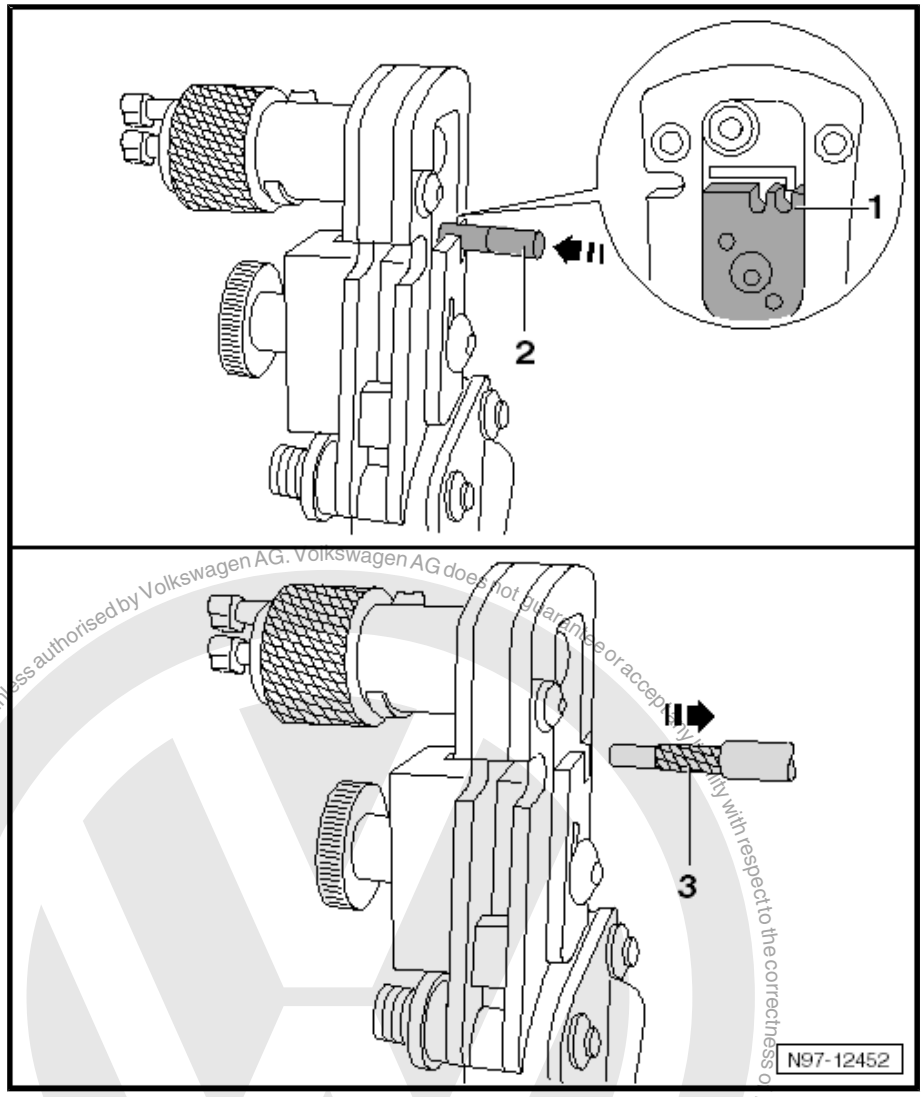

– Push aerial wire -2- through notch -1- into tool adapter to stop.
– Close tool and open it again.
– Pull out aerial wire -3-.

Crimping inner conductor:

Protected by copyright. Copying for private or commercial purposes, in part or in whole, is not permitted unless authorised by Volkswagen AG. Volkswagen AG does not guarantee or accept any liability with respect to the correctness of information in this document. Copyright by Volkswagen AG.
satelettronica

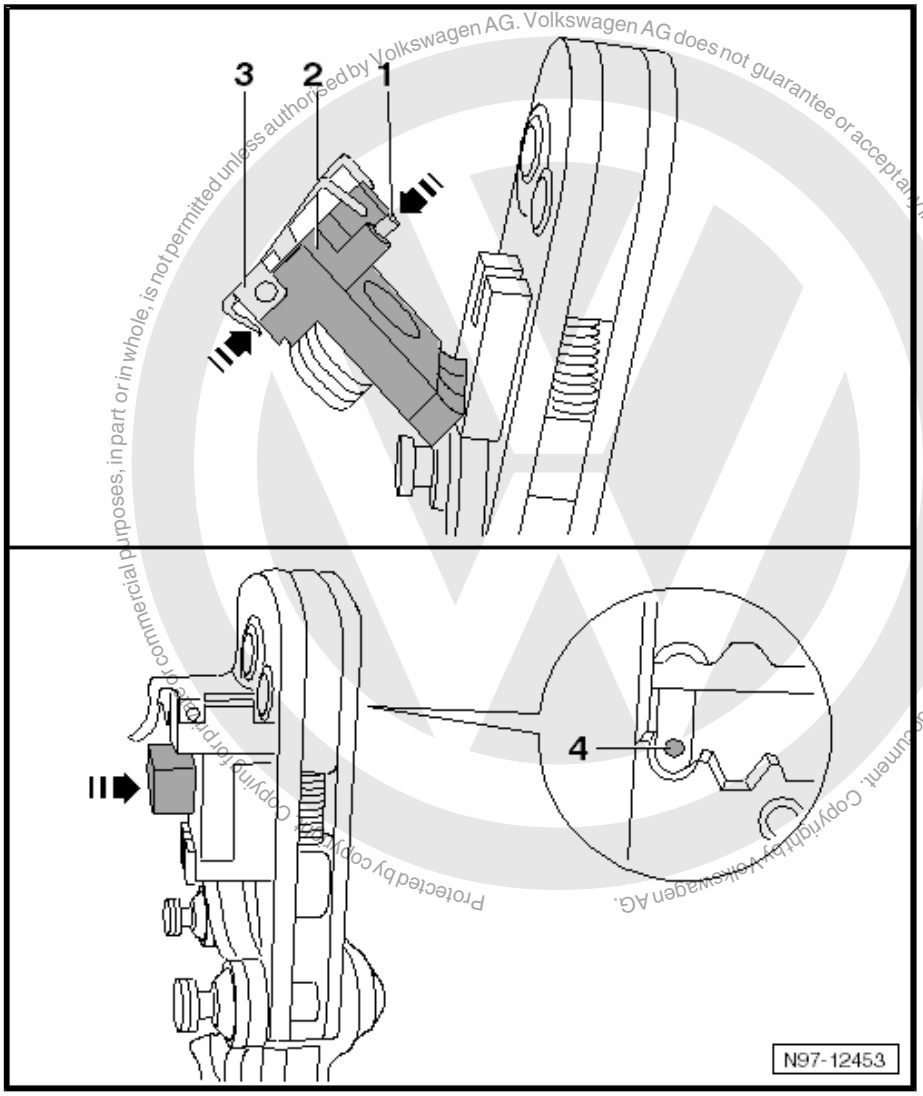

Protected by copyright. Copying for private or commercial purposes, in part or in whole, is not permitted unless authorised by Volkswagen AG. Volkswagen AG does not guarantee or accept any liability with respect to the correctness of information in this document. Copyright by Volkswagen AG.

satelettronica

- Select appropriate adapter according to check of aerial wire ⇒ page 133 ⇒ page 133 .
- Tilt back swinging positioner -2-.
- Open positioning piece -3-. Positioning piece swings upwards.
- Push inner contact -1- into swinging positioner to stop and loosen positioning piece. The inner contact is fixed in place.
- Tip swinging positioner inwards. The inner contact -4- is positioned in the tool adapter.

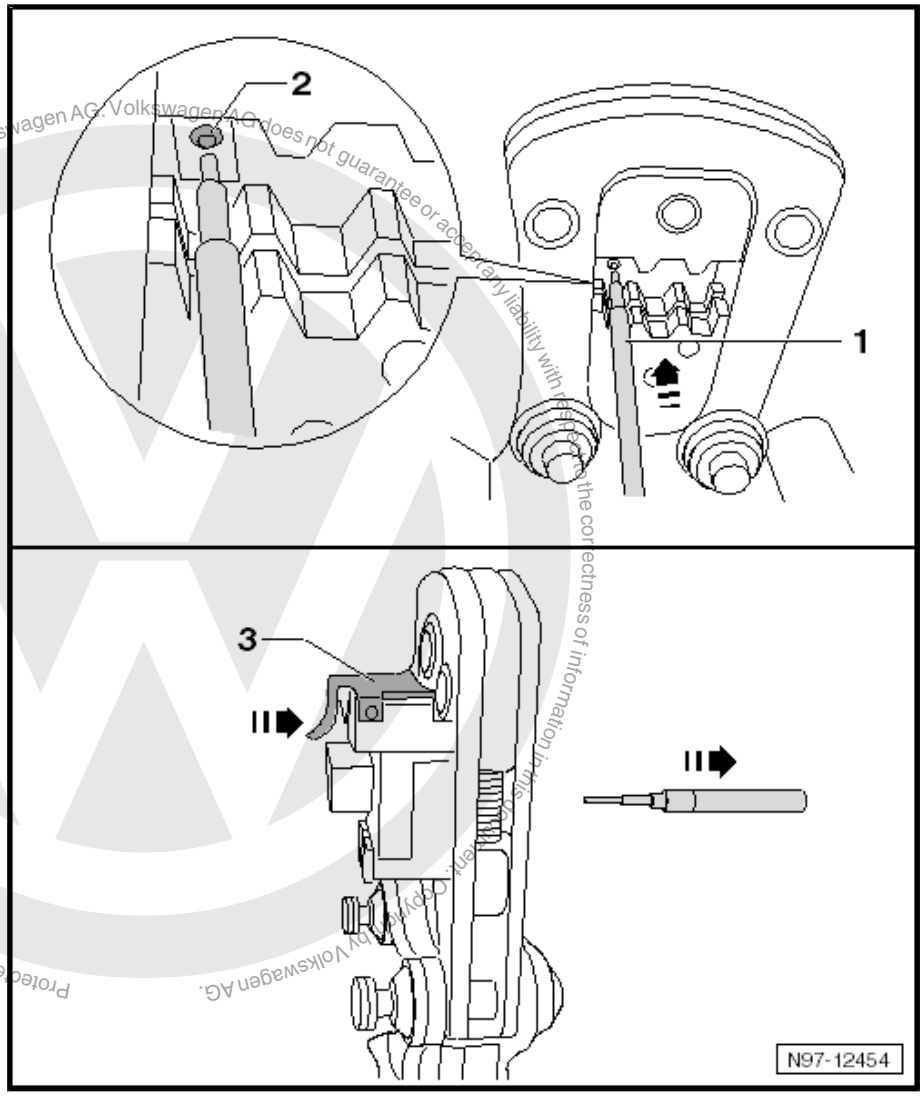

Protected by copyright. Copyright for private or commercial purposes, in part or in whole, is not permitted unless authorised by Volkswagen AG. Volkswagen AG does not guarantee or accept any liability with respect to the correctness of information in this document. Copyright by Volkswagen AG.

satelettronica

- Push aerial wire -1- into inner contact -2- in tool adapter. Hold swinging position in place while doing so.
- Close tool until it opens by itself.
- Open positioning piece -3- and pull out aerial wire.

Crimping outer conductor:

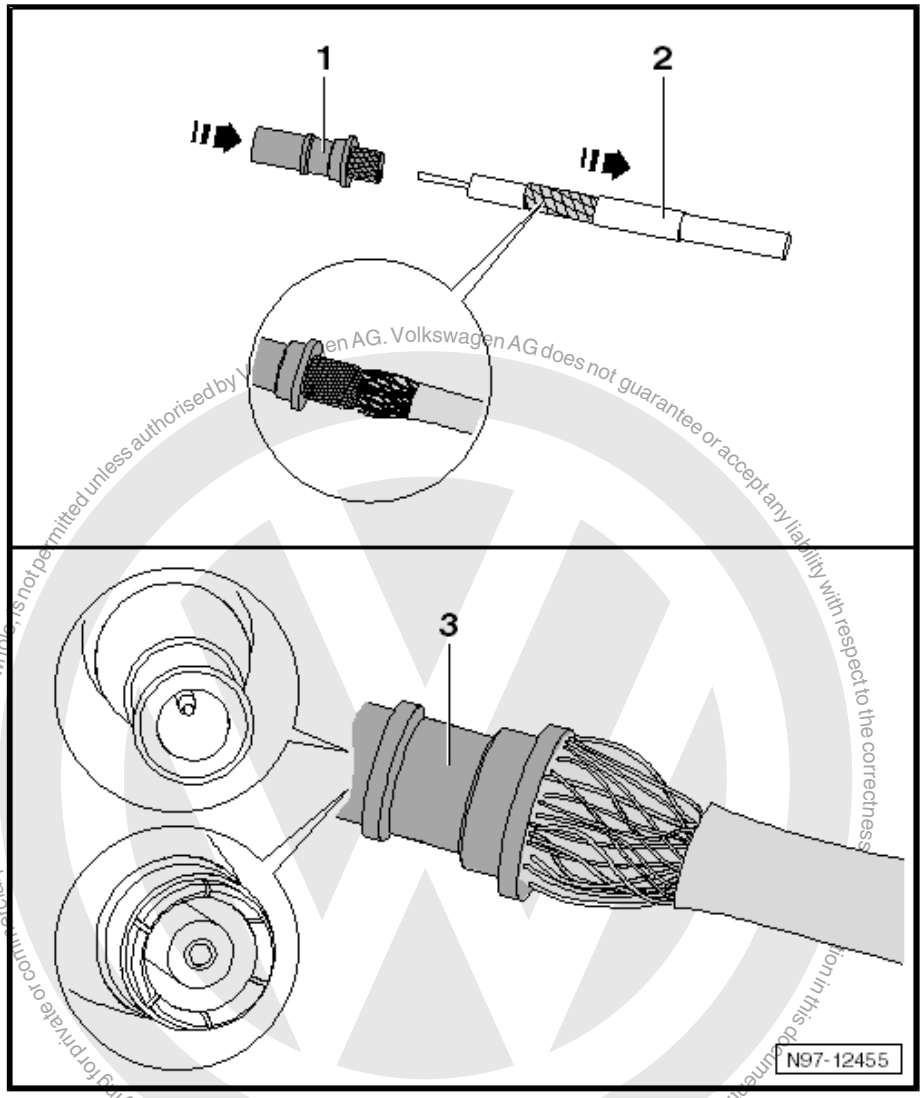

Protected by copyright. Copying for private or commercial purposes, in part or in whole, is not permitted unless authorised by Volkswagen AG. Volkswagen AG does not guarantee or accept any liability with respect to the correctness of information in this document. Copyright by Volkswagen AG.

satelettronica

– Push sleeve -2- and outer contact -1- over inner conductor. The knurled contact part must be pushed under shielding -3- but over the aluminium foil.

– Push on outer contact -4- completely. Ensure proper seating of female connector and pin.

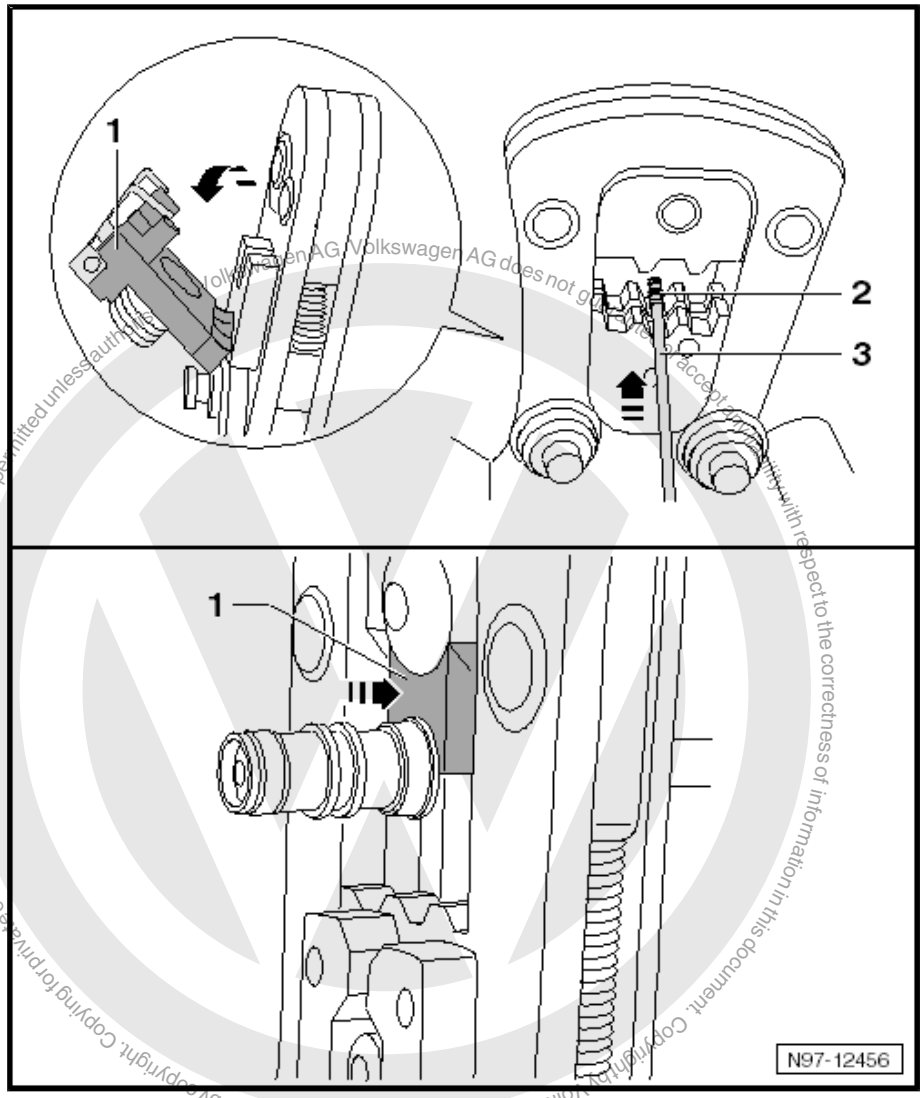

Protected by copyright. Copying for private or commercial purposes, in part or in whole, is not permitted unless authorised by Volkswagen AG. Volkswagen AG does not guarantee or accept any liability with respect to the correctness of information in this document. Copyright by Volkswagen AG.

- Push on sleeve -3- to outer contact.
- Open tool and tilt out swinging positioner -1-.
- Position mounted outer contact -2- in tool adapter in middle notch on contact edge -4-.
- Close tool and open it again.
- Pull out aerial wire.

satelettronica

Volkswagen AG. Volkswagen AG does not guarantee or accept any liability with respect to the correctness of information in this document. Copyright by Volkswagen AG. Protected by copyright. Copying, in whole or in part, is not permitted unless authorised by Volkswagen AG. Private and commercial use is not permitted.

2.7 Repairs to contact housings and connectors

2.7.1 Notes on repairs to contact housings and connectors

Note

- *Observe the general notes on repairs to the vehicle electrical system* ⇒ page 99 .
- *Allocation of the appropriate crimp contacts to the contact housings is by way of the part number stamped on the contact housing. Listed in illustration 198 (electrical connecting elements) in ⇒ Electronic parts catalogue (ETKA) are the part numbers for the contact housings in conjunction with the associated crimp contacts.*
- *Damaged contact housings must always be replaced.*
- *New contact housings can be ordered from the OTC in Kassel.*

2.7.2 Repairs to contacts in contact housings

– If necessary, first open or disengage the secondary locking mechanism of the contact housing ⇒ page 147 .

– Disengage the contact (primary locking mechanism) using the appropriate release tool ⇒ page 147 .

– Pull the contact by the single wire out of the contact housing.

– Select the yellow repair wire with the correct contact from the wiring harness repair set .

– Place the wire to be repaired from the vehicle's own wiring harness to one side (about 20 cm either side of the repair position).

– If necessary, unbind the wiring harness using the folding knife.

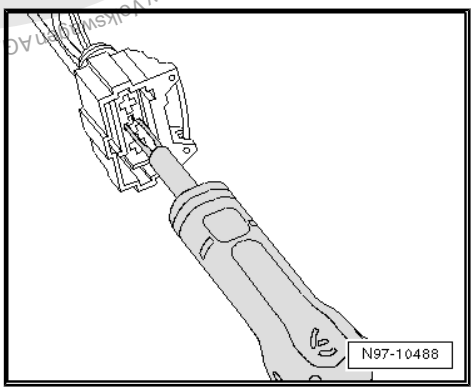

– Push the new contact of the repair wire into the contact housing until it engages.

– Slide the single wire seal onto the repair wire.

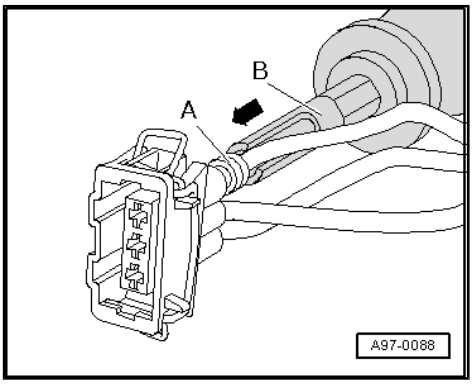

Note

The small diameter of the single wire seal must face the contact housing.

– Slide the single wire seal into the contact housing using the correct assembly tool ⇒ page 144 .

satelettronica

– Trim the repair wire and the single wire of the vehicle's own wiring harness accordingly using wire strippers - VAS 1978/3- .

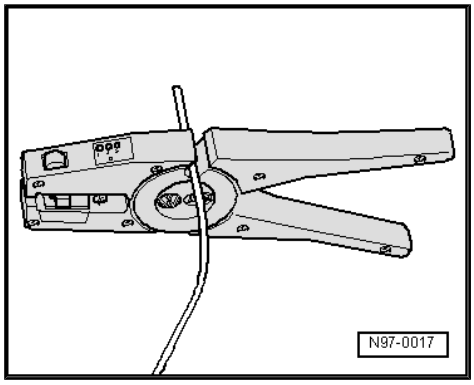

– Strip the 6 - 7 mm of insulation from the end of the repair wire and the vehicle's own single wire using the wire strippers.

– Crimp the stripped ends of the repair wire and single wire of the vehicle's own wiring harness using the crimping pliers and a crimp connector, as described in the chapter entitled “Wiring open circuits with one repair position” ⇒ page 123 .

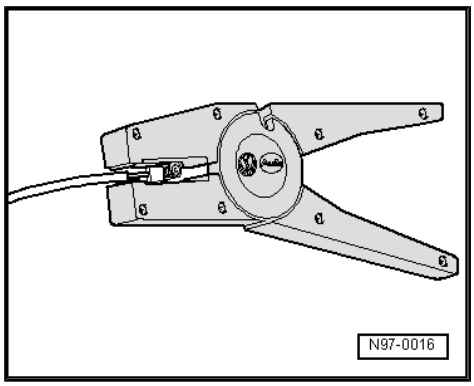

Note

- *Ensure that, where several wires have to be repaired, the crimp connectors are not directly adjacent to each other. To prevent the circumference of the wiring harness from becoming to great, position the crimp connectors so they are offset slightly.*
- *If the repair position was already wrapped, this section has to be wrapped again with yellow insulation tape once the repair has been carried out.*
- *Attach the repaired wiring harness with a cable tie, if necessary, to prevent it from generating noise when the vehicle is in motion.*

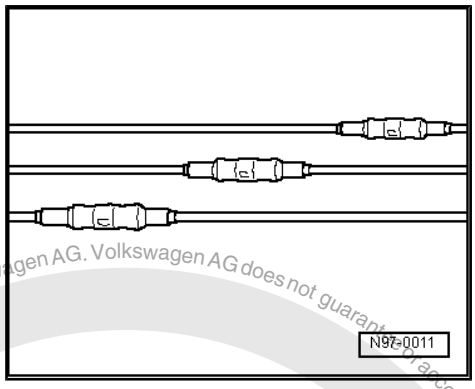

2.7.3 Fitting single wire seals

Note

- *Single wire seals prevent the ingress of moisture and dirt in the contact housing. They are installed, for example, in the engine compartment and must always be reinstalled following repairs.*
- *As standard, the single wire seal is crimped together with the contact on the wire; this is not the case with the repair wires. Before crimping the repair line, the single wire seal must therefore first be pushed onto the wire.*
- *It is essential that the single wire seals are of the correct size to fit the cross section of the repair wire. The outer diameter of the single wire seal is based on the socket diameter of the contact housing. Only carry out the repair using the correct assembly tool.*

Protected by copyright. Copyright by Volkswagen AG. Volkswagen AG does not guarantee or accept any liability with respect to the correctness of information in this document. Copyright by Volkswagen AG.
satelettronica

Protected by copyright. Copying for private or commercial purposes, in part or in whole, is not permitted unless authorised by Volkswagen AG. Volkswagen AG does not guarantee or accept any liability with respect to the correctness of information in this document. Copyright by Volkswagen AG.

Assembling single wire seal:

– Disengage the contact locking mechanism using the appropriate release tool -A- and then pull the wire with the single wire seal backwards -arrow- out of the contact housing.

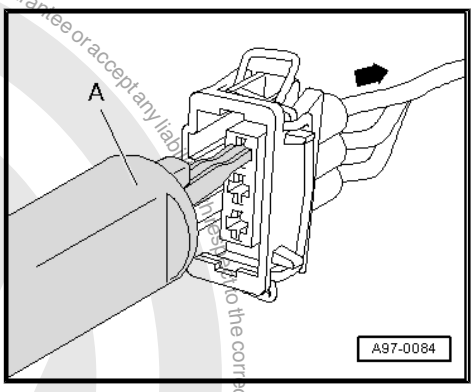

– Cut off the old contact with the single wire seal from the vehicle's own wiring harness.

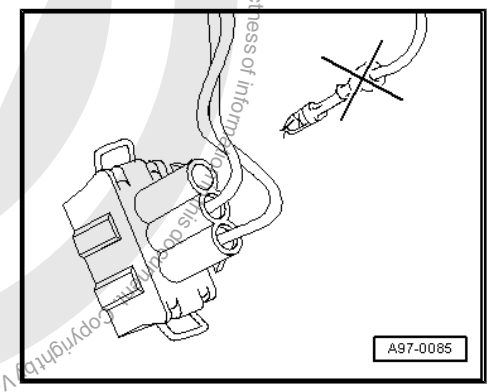

– Slide the repair wire with the new contact in the respective socket of the contact housing until it engages.

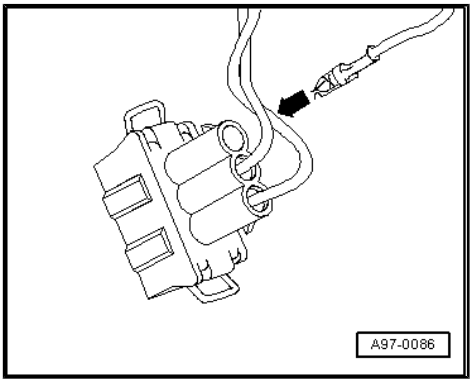

– Place the single wire seal -A- on the free end of the repair wire.

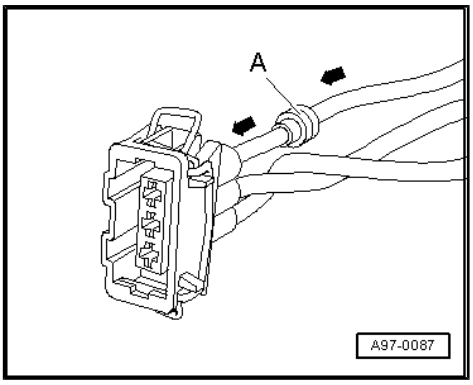

Note

The small diameter of the single wire seal must face the contact housing.

– Slide the single wire seal -A- on the repair wire until it reaches the contact housing.

satelettronica

– Slide the single wire seal -A- using the respective assembly tool -B- fully into the contact housing.

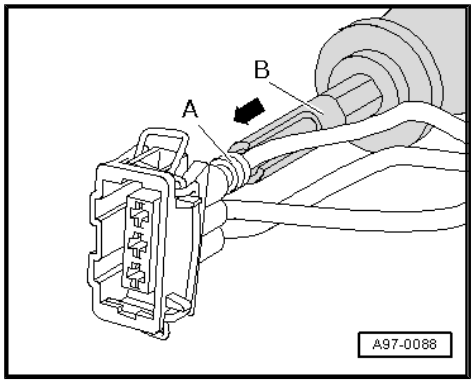

– Trim the repair wire and the single wire of the vehicle's own wiring harness accordingly using wire strippers - VAS 1978/3- .

– Crimp the stripped ends of the repair wire and single wire of the vehicle's own wiring harness using the crimping pliers and a crimp connector, as described in the chapter entitled “Wiring open circuits with one repair position” ⇒ page 123.

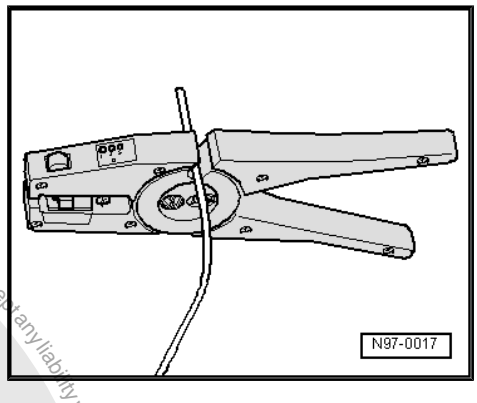

2.7.4 Repairs to contact housings using cut-and-clamp method

Note

- *For technical reasons, the contact housings for cut-and-clamp method can be supplied only with the cut-and clamp-contacts inserted.*
- *These contacts can be removed just like any other contact housing if they are not needed.*
- *Repair wires can be supplied that already have the appropriate contacts crimped on ⇒ Electronics parts catalogue (ETKA) .*

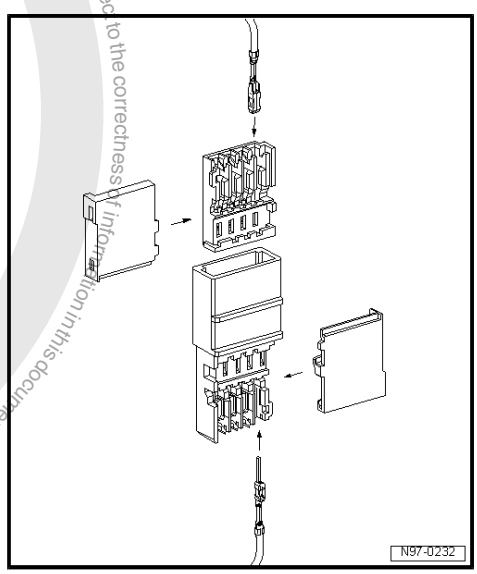

Protected by copyright. Copyright by Volkswagen AG.
Copying for private or commercial purposes, in whole, is not permitted unless authorised by Volkswagen AG. Volkswagen AG does not guarantee or accept any liability with respect to the correctness of information in this document.
satelettronica

2.8 Releasing and dismantling contact housings

2.8.1 Notes on releasing and dismantling contact housings

Note

- *Observe the general notes on repairs to the vehicle electrical system* *⇒ page 99* *.*
- *To release, always use the correct release tools. Under no circumstances should the contacts be pulled out of the contact housings with force.*
- *Damaged contact housings must always be replaced. New contact housings can be ordered from the OTC in Kassel.*
- *As an aid to disengage the secondary locking elements, a small screwdriver can be used.*
- *The socket/pin assignment can be found stamped on the secondary locking mechanism or on the rear of the contact housing.*
- *For more detailed information about the locations of connectors, see ⇒ Current flow diagrams, Electrical fault finding and Fitting locations.*

Allocation of the correct release tool to the respective locking devices can be gleaned from the table in the ⇒ operating instructions of -VAS 1978/35- .

2.8.2 Secondary locking element

The secondary locking mechanism is a housing catch (second line locking mechanism) that secures all the wires in one contact housing. If a secondary locking mechanism is fitted to a contact housing, this must always be opened or removed using the appropriate tool before releasing and pulling out individual crimp contacts.

The secondary locking mechanism is different in colour from the rest of the contact housing. This makes it easier to identify the secondary locking element and clarifies its intended function.

The types of contact housing shown here are just a few examples to show the different functions of secondary locking mechanism.

Example 1:

The housing catch is disengaged by removing a “toothed element” -arrow-.

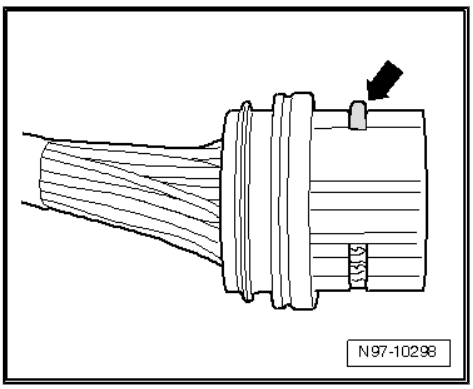

satelettronica

Example 2:

The housing catch is disengaged by opening a “flap” -arrow-.

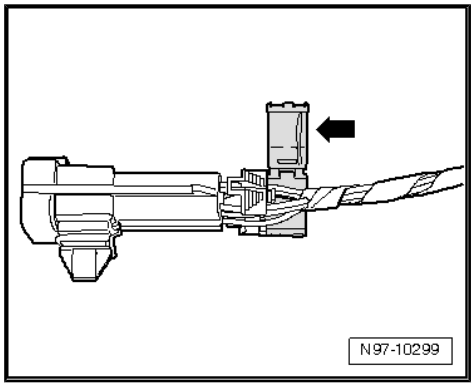

Example 3:

The housing catch can be disengaged by detaching a “slide” -arrow-.

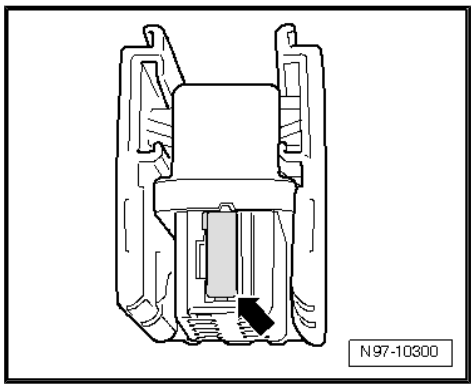

2.8.3 Primary locking element

The primary locking mechanism is what fixes an individual crimp contact in the contact housing.

If necessary, any housing catches in place (secondary locking elements) must be released or removed prior to disengaging the contacts using the prescribed tool ⇒ page 147

The types of primary locking elements shown as follows are just a few examples to show the different functions of primary locking element.

- Round connector systems ⇒ page 148
- Flat connector systems ⇒ page 149
- Special connector systems ⇒ page 151

Allocation of the correct release tool to the respective locking device can be gleaned from the table in the ⇒ operating instructions of -VAS 1978/35- .

2.8.4 Round connector systems

Note

If necessary, any housing catches in place (secondary locking elements) must be released or removed prior to disengaging the contacts using the prescribed tool *⇒ page 147* *.*

Protected by copyright. Copying for private or commercial purposes, in part or in whole, is not permitted unless authorised by Volkswagen AG. Volkswagen AG does not guarantee or accept any liability with respect to the correctness of information in this document. Copyright by Volkswagen AG.

satelettronica

– Insert the release tool appropriate for the contact housing in the release port of the contact housing.

– Grab hold of the contact by the wire and push it lightly into the contact housing -arrow-.

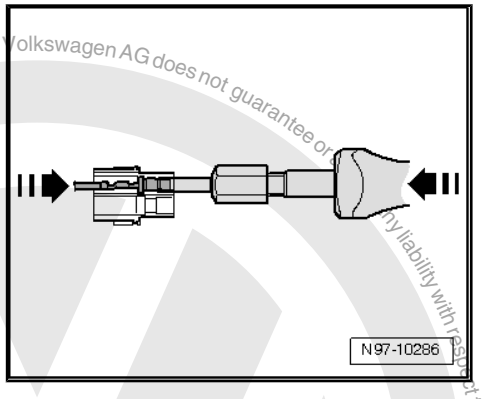

Note

By pushing the contact in the direction of the contact housing, the locking tabs of the contact are lifted up by the housing edge and disengaged using the release tool.

– At the same time, push the release tool in the direction of the contact housing -arrow- and pull out the released contact from the contact housing.

– The release tool can be pulled out of the contact housing again once the contact has been removed.

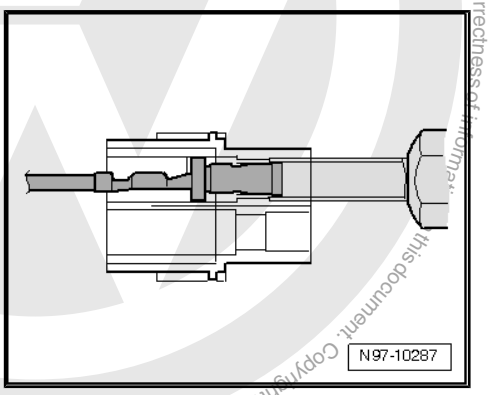

2.8.5 Flat connector systems

Note

If necessary, any housing catches in place (secondary locking elements) must be released or removed prior to disengaging the contacts using the prescribed tool *⇒ page 147* *.*

Flat connector with one locking tab:

– Insert the release tool appropriate for the contact housing in the release port of the contact housing.

– Grab hold of the contact by the wire and push it lightly into the contact housing -arrow-.

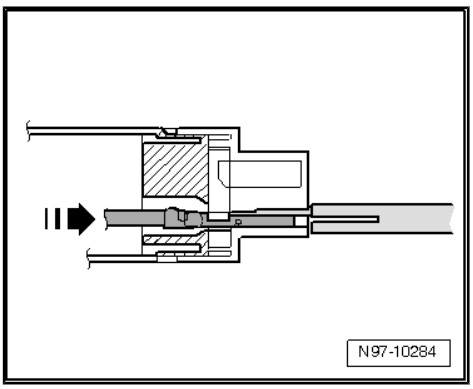

Note

By pushing the contact in the direction of the contact housing, the locking tab of the contact is lifted up by the housing edge and can be disengaged using the release tool.

Protected by copyright. Copying for private or commercial purposes, in part or in whole, is not permitted unless authorised by Volkswagen AG. Volkswagen AG does not guarantee or accept any liability with respect to the correctness of this document. Copyright by Volkswagen AG.
satelettronica

– At the same time, push the release tool in the direction of the contact housing and pull out the released contact from the contact housing -arrow-.

– The release tool can be pulled out of the contact housing again once the contact has been removed.

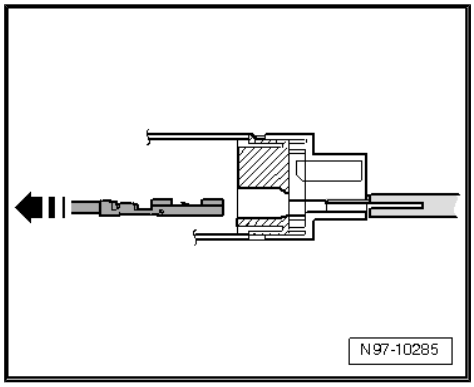

Flat connector with two locking tabs:

– Insert the release tool appropriate for the contact housing in the release port of the contact housing.

– Grab hold of the contact by the wire and push it fully into the contact housing -arrow-.

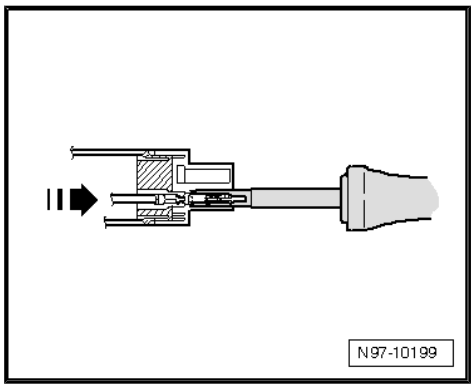

Note

By pushing the contact in the direction of the contact housing, the locking tabs of the contact are lifted up by the housing edge and disengaged using the release tool.

– At the same time, push the release tool in the direction of the contact housing and pull out the released contact from the contact housing -arrow-.

– The release tool can be pulled out of the contact housing again once the contact has been removed.

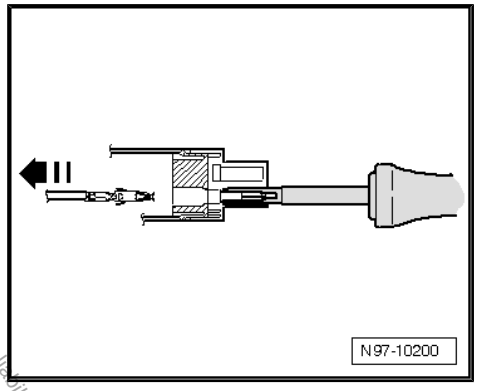

Asymmetrical:

– Insert the release tool appropriate for the contact housing in the release port of the contact housing.

Grab hold of the contact by the wire and push it lightly into the contact housing -arrow-.

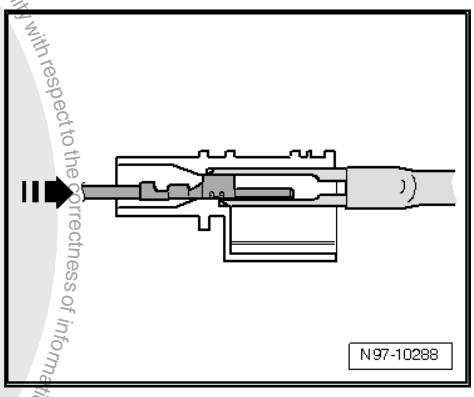

Note

By pushing the contact in the direction of the contact housing, the locking tabs of the contact are lifted up by the housing edge and disengaged using the release tool.

Protected by copyright. Copying for private or commercial purposes, in part or in whole, is not permitted unless authorised by Volkswagen AG. Volkswagen AG does not guarantee or accept any liability with respect to the correctness of information in this document. Copyright by Volkswagen AG.

satelettronica

– At the same time, push the release tool in the direction of the contact housing and pull out the released contact from the contact housing -arrow-.

– The release tool can be pulled out of the contact housing again once the contact has been removed.

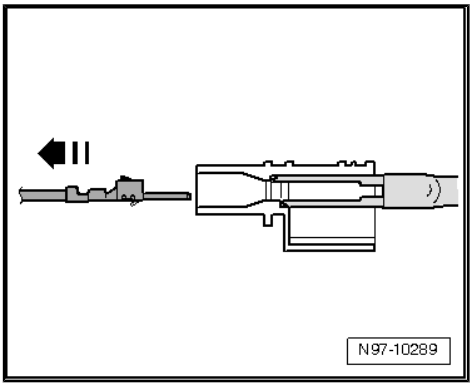

2.8.6 Special connector systems

Note

If necessary, any housing catches in place (secondary locking elements) must be released or removed prior to disengaging the contacts using the prescribed tool *⇒ page 147* *.*

Faston contacts:

– Insert the release tool appropriate for the contact housing in the release port of the contact housing.

– Grab hold of the contact by the wire and push it lightly into the contact housing.

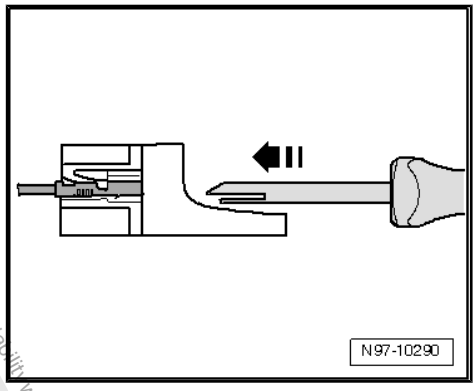

Note

By pushing the contact in the direction of the contact housing, the locking tabs of the contact are lifted up by the housing edge and disengaged using the release tool.

– At the same time, push the release tool in the direction of the contact housing and pull out the released contact from the contact housing -arrow-.

– The release tool can be pulled out of the contact housing again once the contact has been removed.

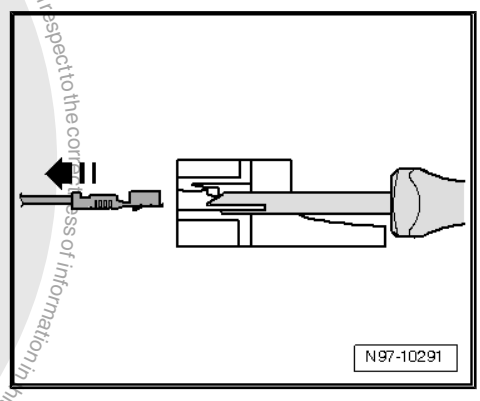

Protected by copyright. Copying for private or commercial purposes, in part or in whole, is not permitted unless authorised by Volkswagen AG. Copyright by Volkswagen AG. Volkswagen AG does not guarantee or accept any liability with respect to the correctness of information in this document.
satelettronica

Protected by copyright. Copying for private or commercial purposes, in part or in whole, is not permitted unless authorised by Volkswagen AG. Volkswagen AG does not guarantee or accept any liability with respect to the correctness of information in this document. Copyright by Volkswagen AG.

GT 150/280 contacts:

– Insert the release tool appropriate for the contact housing under the locking tab into the contact housing.

– Push the tool onto the limit stop -arrow- in the contact housing.

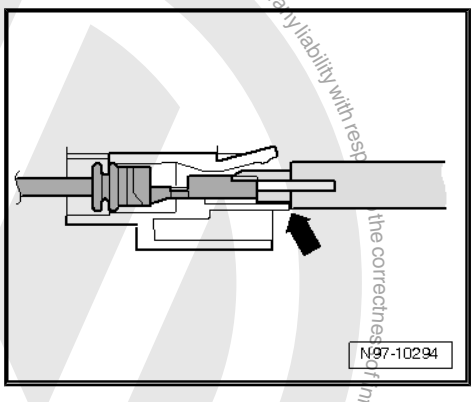

The contact is ejected from the contact housing.

– The release tool can be pulled out of the contact housing again once the contact has been ejected.

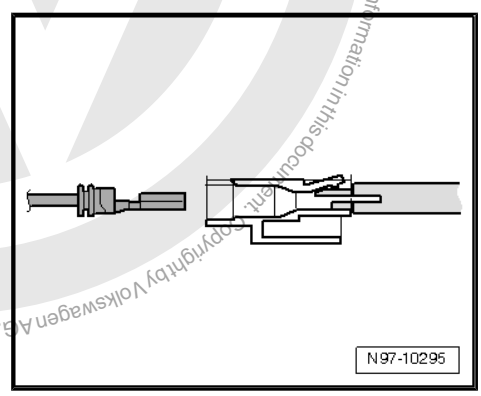

Contacts without locking tabs:

– Insert the release tool under the locking tab of the contact housing.

– Push through the release tool with a light upward movement -arrow- onto the limit stop.

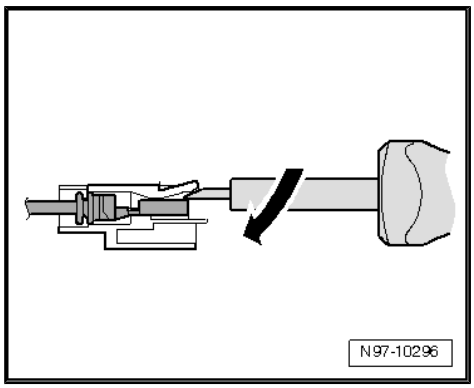

The contact is ejected from the contact housing.

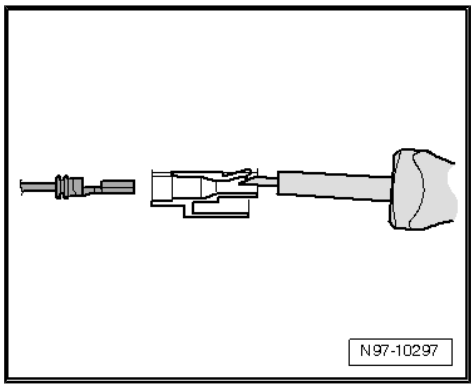

satelettronica

3 Contact surface cleaning set - VAS 6410-

3.1 Using contact surface cleaning set - VAS 6410-

The contact surface cleaning set - VAS 6410- enables optimal repair of the electrical systems and components in the vehicle. The tools allow performing repair work in the area of the sensor in wiring harnesses for threaded connections in the high-current circuit (starting and charge current). The contact surface cleaning set - VAS 6410- is matched to the structural features of the vehicles and ensures safe repairs while making the work easier at the same time.

Note

The illustrations shown here are just a few examples of repair work.

Contact surface cleaning set VAS 6410

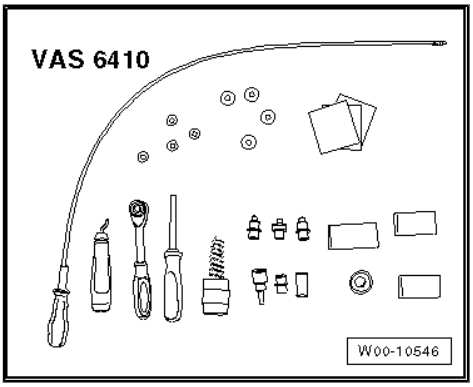

3.1.1 Repairing ring terminals

Special tools and workshop equipment required

- VAG 1331

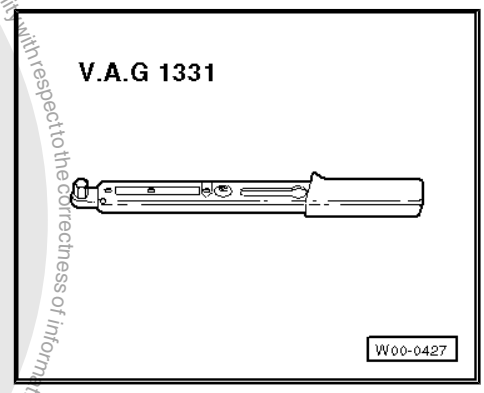

Note

- *The use of penetrating fluid, contact spray or grease etc. is prohibited since the missing adhesion in the threads may cause a torque excess and, therefore, the break of the threaded connection.*
- *The grey sanding pads are suitable for light dirt and "soft surfaces". The red sanding pads are suitable for heavy dirt and "hard surfaces".*

Copyright by Volkswagen AG. Volkswagen AG does not guarantee or accept any liability with respect to the correctness of information in this document. Copyright by Volkswagen AG. Reproduced by permission of Volkswagen AG. Copying for private or commercial purposes, in part or in whole, is not permitted unless authorised by Volkswagen AG.
satelettronica

WARNING

Danger of injury! Observe warning notices and safety regulations ⇒ page 3 !

- Disconnect battery.
- Loosen cap nut and remove ring terminal from threaded connection.
- Check ring terminal for corrosion, dirt etc.
- Select suitable adapter and suitable sanding pad.

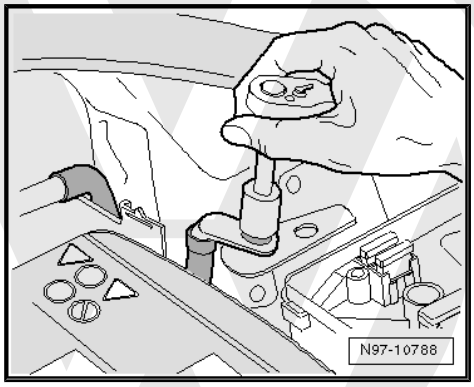

Note

As an alternative, the sanding block may also be used.

Caution

Take care not to abrade excessively the tin coating and ensure that the copper does not appear. This could produce a galvanic cell which destroys metal and causes faulty repair.

Note

As the thickness of the tin coating may differ according to the design, the cleaning process must be performed step by step and a visual check of the ring terminal is necessary between the steps.

- Insert adapter into ring terminal and grind off corrosion and dirt with circular movements.
- Check ring terminal and regrind if necessary.

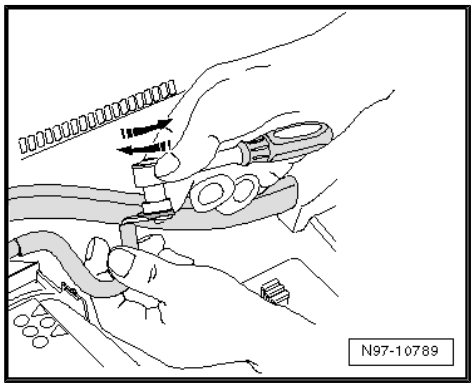

Protected by copyright. Copying for private or commercial purposes, in part or in whole, is not permitted unless authorised by Volkswagen AG. Volkswagen AG does not guarantee or accept any liability with respect to the correctness of information in this document. Copyright by Volkswagen AG.
satelettronica

– If necessary, remove punching burr on ring terminal using deburrer.

– Tighten ring terminal to specified torque ⇒ Current flow diagrams, Electrical fault finding and Fitting locations.

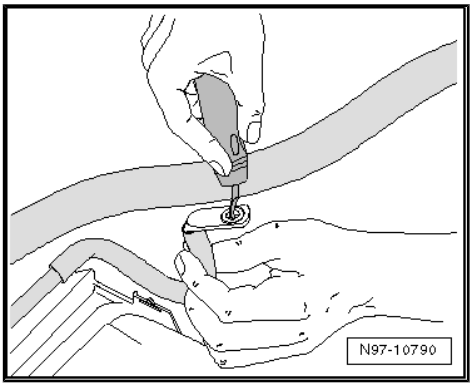

Note

Optimum contact is ensured when the components to be secured are tightened to the specified torque after cleaning.

– Apply suitable anti-corrosion treatment to connection ⇒ page 158 .

– Reconnect battery.

WARNING

Danger of injury! Observe warning notices and safety regulations ⇒ page 3 !

– Teach in electric windows again, enter radio code, set clock and, if necessary, recode control units which emit code signals.

3.1.2 Repairing threaded connections

Special tools and workshop equipment required

♦ VAG 1331

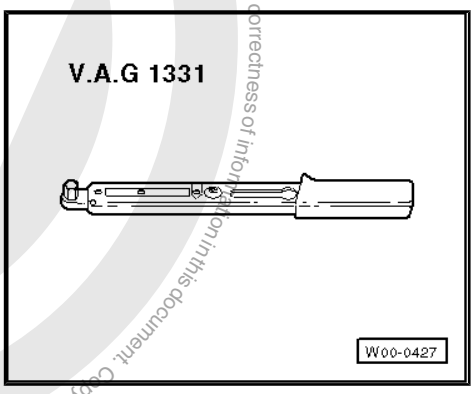

Note

♦ *The use of penetrating fluid, contact spray or grease etc. is prohibited since the missing adhesion in the threads may cause a torque excess and, therefore, the break of the threaded connection.*

♦ *The grey sanding pads are suitable for light dirt and "soft surfaces". The red sanding pads are suitable for heavy dirt and "hard surfaces".*

WARNING

Danger of injury! Observe warning notices and safety regulations ⇒ page 3 !

– Disconnect battery.

Protected by copyright. Copying for private or commercial purposes, in part or in whole, is not permitted unless authorised by Volkswagen AG. Volkswagen AG does not guarantee or accept any liability with respect to the correctness of information in this document. Copyright by Volkswagen AG.
satelettronica

– Loosen cap nut and remove ring terminal from threaded connection.
– Check threaded connection for corrosion, dirt etc.
– Select suitable adapter and suitable sanding pad for threaded connection.

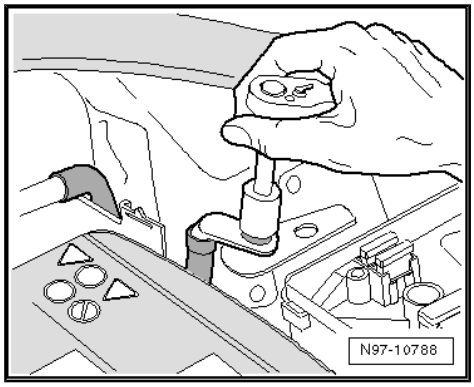

Caution

Take care not to abrade excessively the tin coating and ensure that the copper does not appear. This could produce a galvanic cell which destroys metal and causes faulty repair.

Note

As the thickness of the tin coating may differ according to the design, the cleaning process must be performed step by step and a visual check of the ring terminal is necessary between the steps.

– Set adapter on threaded connection and grind off corrosion and dirt with circular movements.
– Check threaded connection and regrind if necessary.
– Tighten connection and, if necessary, locating element again to specified torque ⇒ Current flow diagrams, Electrical fault finding and Fitting locations.

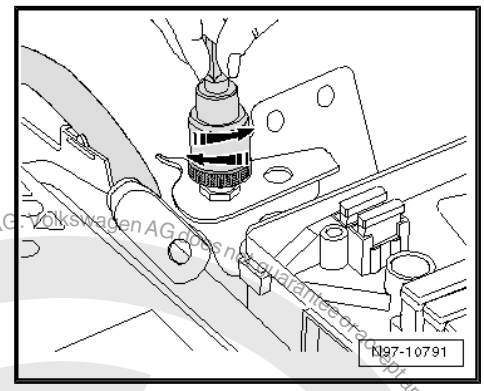

Note

Optimum contact is ensured when the components to be secured are tightened to the specified torque after cleaning.

– Apply suitable anti-corrosion treatment to threaded connection ⇒ page 158 .
– Reconnect battery.

WARNING

Danger of injury! Observe warning notices and safety regulations ⇒ page 3 !

– Teach in electric windows again, enter radio code, set clock and, if necessary, recode control units which emit code signals.

3.1.3 Cleaning battery clamp and battery terminal

Special tools and workshop equipment required

Protected by copyright. Copying for private or commercial purposes, in part or in whole, is not permitted unless authorised by Volkswagen AG. Volkswagen AG does not guarantee or assume any liability with respect to the correctness of information in this document. Copyright by Volkswagen AG.
satelettronica

♦ VAG 1331

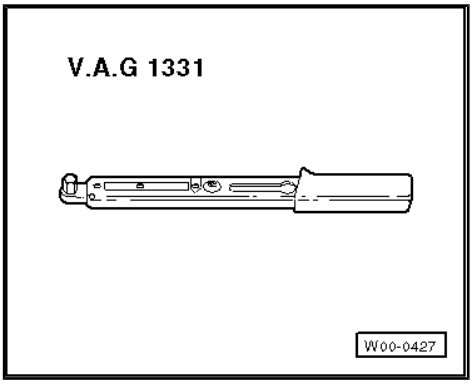

Note

The use of penetrating fluid, contact spray or grease etc. is prohibited since the missing adhesion in the threads may cause a torque excess and, therefore, the break of the threaded connection.

WARNING

Danger of injury! Observe warning notices and safety regulations ⇒ page 3 !

– Disconnect battery.
– Check battery clamp and battery terminal for corrosion or dirt.
– Clean battery clamp using wire brush of battery terminal cleaner with circular movements.

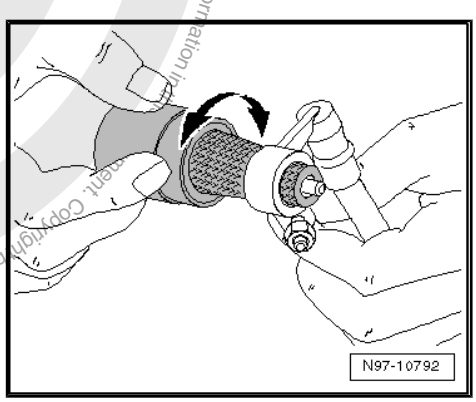

Protected by copyright. Copying for private or commercial purposes, in part or in whole, is not permitted unless authorised by Volkswagen AG. Volkswagen AG does not guarantee or accept any liability with respect to the correctness of information in this document. Copyright by Volkswagen AG.
satelettronica

– Clean battery terminal using underside of battery terminal cleaner with circular movements.

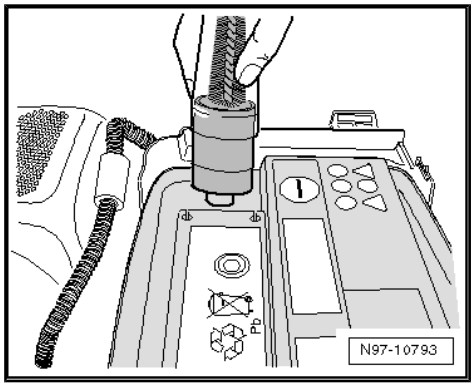

WARNING

Danger of injury! Observe warning notices and safety regulations ⇒ page 3 !

– Reconnect battery and tighten battery terminals to specified torque.

Note

Optimum contact is ensured when the components to be secured are tightened to the specified torque after cleaning.

3.1.4 Anti-corrosion treatment

Caution

Missing anti-corrosion treatment results in damage to the on-board supply.

Note

- *All threaded connections must be tightened to specified torque.*
- *Always use hose supplied with anti-corrosive agent tin.*
- *Use protection wax for cold area.*
- *Use cavity sealing agent for warm area.*
- *The sealing agent independently reaches the respective points through capillary action.*

– Hold injector below ring terminal and spray pin all around.

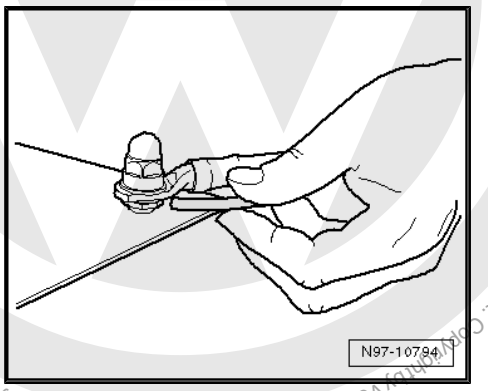

Protected by copyright. Copying for private or commercial purposes, in part or in whole, is not permitted unless authorised by Volkswagen AG. Volkswagen AG does not guarantee or accept any liability with respect to the correctness of information in this document. Copyright by Volkswagen AG.
satelettronica

– Hold injector above ring terminal and spray pin and wiring eye all around.

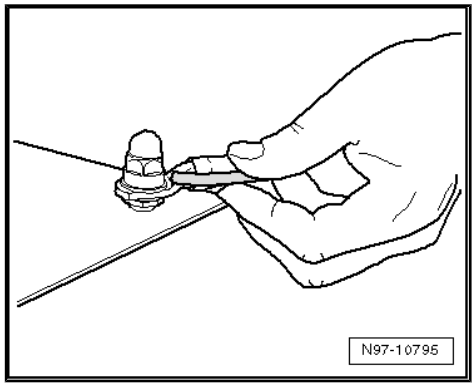

satelettronica

Protected by copyright. Copying for private or commercial purposes, in part or in whole, is not permitted unless authorised by Volkswagen AG. Volkswagen AG does not guarantee or accept any liability with respect to the correctness of information in this document. Copyright by Volkswagen AG.

Protected by copyright. Copyright by Volkswagen AG. Volkswagen AG does not guarantee or accept any liability with respect to the correctness of information in this document. Copyright by Volkswagen AG. Not permitted unless authorised. Commercial purposes, in part or in whole, not permitted unless authorised. Copying for private or commercial purposes, in part or in whole, not permitted unless authorised.

4 Renewing Lambda probe

Note

- *Do not repair Lambda probe wires, since this can result in malfunctions.*
- *If necessary, replace attachment parts, cable ties or marking rings to match the uniform probe to the defective probe as specified.*
- *If necessary, identify the lambda probe by means of the protective tube* *⇒ page 162* *.*

4.1 Renewing LSF Lambda probe (4-pin)

Note

- *If necessary, replace attachment parts, cable ties or marking rings to match the uniform probe to the defective probe as specified.*
- *Do not repair Lambda probe wires, since this can result in malfunctions.*

– Remove the defective Lambda probe.

– Place both Lambda probes next to each other so that the sensor housings are at the same height.

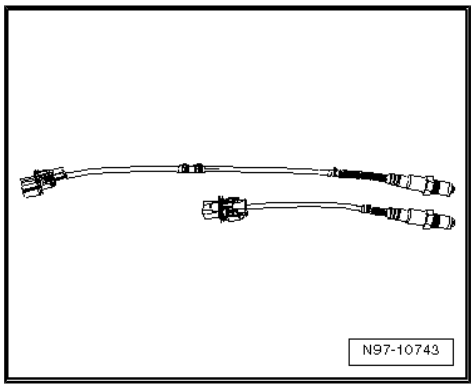

satelettronica

– Tie back any excess in the uniform probe length (approx. 50 - 250 mm) to the size of the defective probe and secure with cable ties -1-.

– Check that the connector housing of the Lambda probe is compatible with the on-board supply side.

– If necessary, replace the on-board supply system connector with the Lambda probe connector housing supplied ⇒ page 143

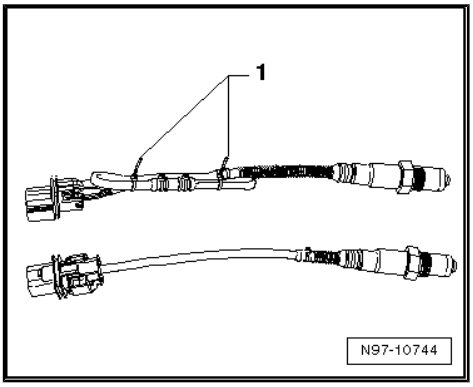

Note

- *The connector housing should only be replaced on older vehicles. On new vehicles, the connector housing coding matches.*
- *Observe pin assignment. For reasons of clarity, respective pins in new connector housing have a colour marking.*
- *Further notes can be found in the leaflet of the new Lambda probe.*

– Install the new Lambda probe in the vehicle.

4.2 Renewing LSU Lambda probe (6-pin)

Note

- *If necessary, replace attachment parts, cable ties or marking rings to match the uniform probe to the defective probe as specified.*
- *The wires should not be crimped or cut as otherwise the function of the Lambda probe will be impaired.*

– Remove the old Lambda probe.

– Place both Lambda probes next to each other so that the sensor housings are at the same height.

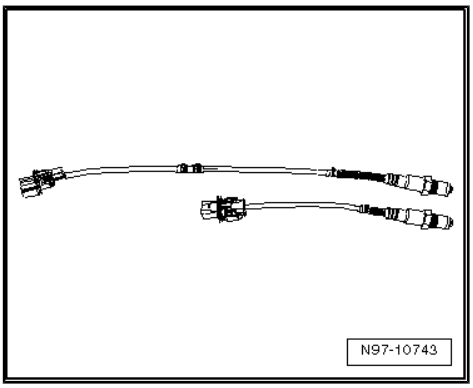

Protected by copyright. Copyright by Volkswagen AG. Volkswagen AG does not accept any liability with respect to the correctness of information in this document. Copyright by Volkswagen AG.
satelettronica

Protected by copyright. Copyright by Volkswagen AG. Volkswagen AG does not guarantee or accept any liability with respect to the correctness of information in this document. Copyright by Volkswagen AG. Reproduction for private or commercial purposes, in part or in whole, is not permitted unless authorised by Volkswagen AG.

– Tie back any excess in the uniform probe length (approx. 50 - 250 mm) to the size of the defective probe and secure with cable ties -1-.
– Install the new Lambda probe in the vehicle.

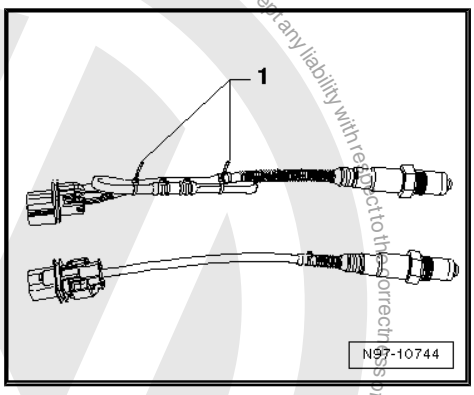

4.3 Types of protective tube on uniform Lambda probes

Note

In addition to identifying by way of the part number, the protective tube can also be used as a means of identification.

Type D1, 6 openings at 3.5 mm each

Only used on 4-pin LSF Lambda probes.

Type D2, 6 openings at 2 mm each

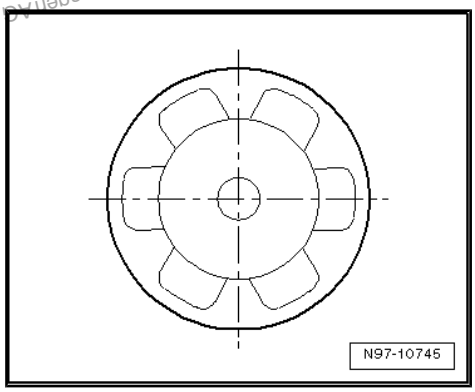

Only used on 4-pin LSF Lambda probes and 6-pin LSU Lambda probes.

Type D4, 12 openings at 1.4 mm each

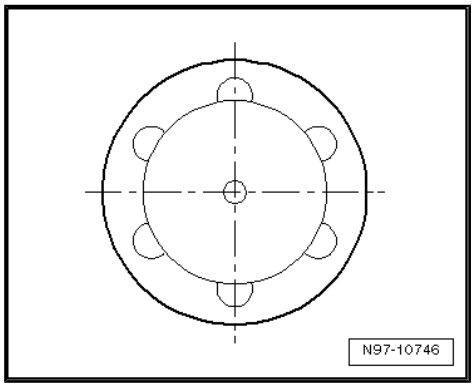

satelettronica

Only used on 4-pin LSF Lambda probes and 6-pin LSU Lambda probes.

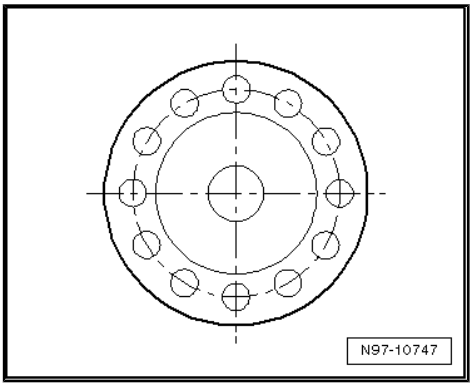

Protected by copyright. Copying for private or commercial purposes, in part or in whole, is not permitted unless authorised by Volkswagen AG. Volkswagen AG does not guarantee or accept any liability with respect to the correctness of information in this document. Copyright by Volkswagen AG.
satelettronica